PB2006-100660

FHWA Road Tunnel

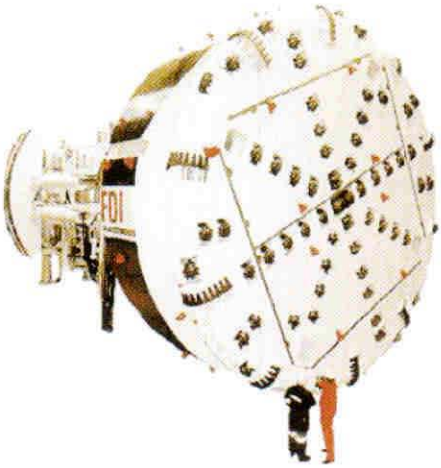

Design Guidelines

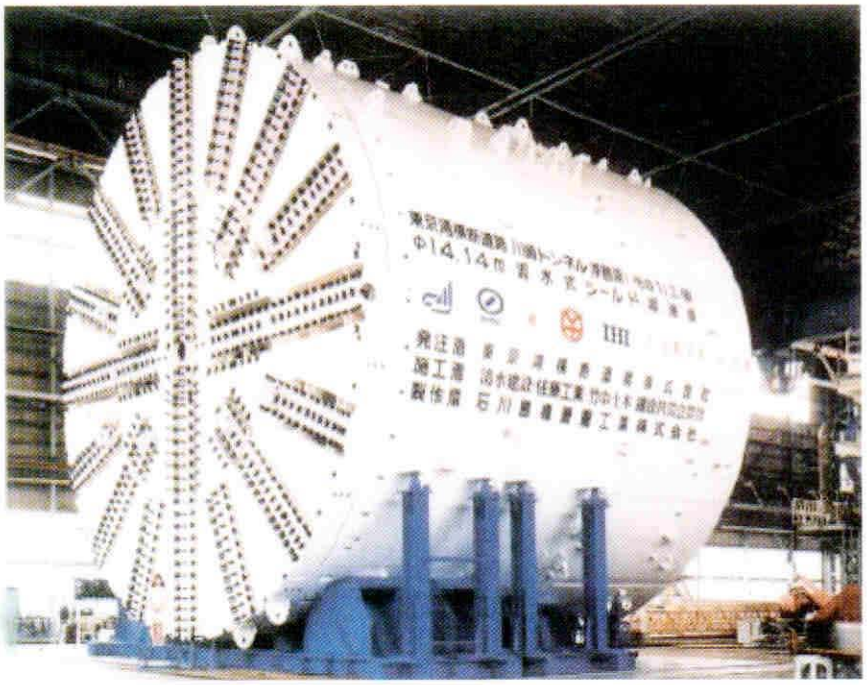

U.S.Department of Transportation
Federal Highway Administration

Notice

This document is disseminated under the sponsorship of the U.S. Department of Transportation in the interest of information exchange. The U.S. Government assumes no liability for the use of the information contained in this document.

The U.S. Government does not endorse products or manufacturers. Trademarks or manufacturers' names appear in this report only because they are considered essential to the objective of the document.

Quality Assurance Statement

The Federal Highway Administration (FHWA) provides high-quality information to serve Government, industry, and the public in a manner that promotes public understanding. Standards and policies are used to ensure and maximize the quality, objectivity, utility, and integrity of its information. FHWA periodically reviews quality issues and adjusts its programs and processes to ensure continuous quality improvement.

1. Report No. FHWA-IF-05-023	**2. Government Accession No.**	**3. Recipient's Catalog No.**
4. Title and Subtitle *FHWA Road Tunnel Design Guidelines*		**5. Report Date** July 2004
		6. Performing Organization Code:
7. Author(s) Dots Oyenuga, Ph.D., P.E.		**8. Performing Organization Report No.** FHWA-IF-05-023
9. Performing Organization Name and Address ASC, Inc. 7700 Edgewater Drive, Suite 668 Oakland, CA 94621		**10. Work Unit No.**
		11. Contract or Grant No. DTFH 61-03-p-00457
12. Sponsoring Agency Name and Address Federal Highway Administration Office of Bridge Technology 400 Seventh Street, SW Washington DC 20590		**13. Type of Report and Period Covered** Design Guidelines
		14. Sponsoring Agency Code HAAM-10G

15. Supplementary Notes

COTR: Anthony S. Caserta, P.E.;
Reviewers: Steve L. Ernst, P.E.; Matt Greer; P.E., Gary Jakovich, P.E.; Jesus Rohena, P.E.

16. Abstract

This document provides technical criteria and guidance for the planning and design of road tunnels. Specific areas covered include planning, studies and investigations, design, and design of construction, of tunnels and shafts. Performance concepts and prediction requirements for Tunnel Boring Machines are also presented. Potential tunnel engineers are the main audience.

17. Key Words TUNNEL, SHAFT, ROAD, DESIGN, CONSTRUCTION, GUIDELINES, TBM.	**18. Distribution Statement** No restrictions. This document is available to the public through the National Technical Information Service, Springfield, VA 22161.

19. Security Classif. (of this report) Unclassified	**20. Security Classif. (of this page)** Unclassified	**21. No. of Pages** 139	**22. Price**

Form DOT F 1700.7 (8-72) Reproduction of completed page authorized

ROAD TUNNEL DESIGN GUIDELINES

This Road Tunnel Design Guidelines document provides technical criteria and guidance for the planning and design of road tunnels. Specific areas covered include planning, studies and investigations, design, and design of construction, of tunnels and shafts. Performance concepts and prediction requirements for Tunnel Boring Machines are also presented. It is hoped that potential tunnel engineers will obtain an overall view of the field, and gain an appreciation of the diversity of problems that tunnel engineers must address.

SI* (MODERN METRIC) CONVERSION FACTORS

APPROXIMATE CONVERSIONS TO SI UNITS				
SYMBOL	**WHEN YOU KNOW**	**MULTIPLY BY**	**TO FIND**	**SYMBOL**
LENGTH				
in	*inches*	*25.4*	*millimeters*	*mm*
ft	*feet*	*0.305*	*meters*	*m*
yd	*yards*	*0.914*	*meters*	*m*
mi	*miles*	*1.61*	*kilometers*	*km*
AREA				
in^2	*square inches*	*645.2*	*square millimeters*	mm^2
ft^2	*square feet*	*0.093*	*square meters*	m^2
yd^2	*square yard*	*0.836*	*square meters*	m^2
ac	*acres*	*0.405*	*hectares*	*ha*
mi^2	*square miles*	*2.59*	*square kilometers*	km^2
VOLUME				
fl oz	*fluid ounces*	*29.57*	*milliliters*	*mL*
gal	*gallons*	*3.785*	*liters*	*L*
ft^3	*cubic feet*	*0.028*	*cubic meters*	m^3
yd^3	*cubic yards*	*0.765*	*cubic meters*	m^3
NOTE: volumes greater than 1000 L shall be shown in m^3				
MASS				
oz	*ounces*	*28.35*	*grams*	*g*
lb	*pounds*	*0.454*	*kilograms*	*kg*
T	*short tons (2000 lb)*	*0.907*	*megagrams (or "metric ton")*	*Mg (or "t")*
TEMPERATURE (exact degrees)				
°F	*Fahrenheit*	*5 (F-32)/9 or (F-32)/1.8*	*Celsius*	*°C*
ILLUMINATION				
fc	*foot-candles*	*10.76*	*lux*	*lx*
fl	*foot-Lamberts*	*3.426*	*candela/m^2*	*cd/m^2*
FORCE and PRESSURE or STRESS				
lbf	*poundforce*	*4.45*	*newtons*	*N*
lbf/in^2	*poundforce per square inch*	*6.89*	*kilopascals*	*kPa*

APPROXIMATE CONVERSIONS FROM SI UNITS				
SYMBOL	**WHEN YOU KNOW**	**MULTIPLY BY**	**TO FIND**	**SYMBOL**
LENGTH				
mm	*millimeters*	*0.039*	*inches*	*in*
m	*meters*	*3.28*	*feet*	*ft*
m	*meters*	*1.09*	*yards*	*yd*
km	*kilometers*	*0.621*	*miles*	*mi*
AREA				
mm^2	*square millimeters*	*0.0016*	*square inches*	*in^2*
m^2	*square meters*	*10.764*	*square feet*	*ft^2*
m^2	*square meters*	*1.195*	*square yards*	*yd^2*
ha	*hectares*	*2.47*	*acres*	*ac*
km^2	*square kilometers*	*0.386*	*square miles*	*mi^2*
VOLUME				
mL	*milliliters*	*0.034*	*fluid ounces*	*fl oz*
L	*liters*	*0.264*	*gallons*	*gal*
m^3	*cubic meters*	*35.314*	*cubic feet*	*ft^3*
m^3	*cubic meters*	*1.307*	*cubic yards*	*yd^3*
MASS				
g	*grams*	*0.035*	*ounces*	*oz*
kg	*kilograms*	*2.202*	*pounds*	*lb*
Mg (or "t")	*megagrams (or "metric ton")*	*1.103*	*short tons (2000 lb)*	*T*
TEMPERATURE (exact degrees)				
°C	*Celsius*	*1.8C+32*	*Fahrenheit*	*°F*
ILLUMINATION				
lx	*lux*	*0.0929*	*foot-candles*	*fc*
cd/m^2	*candela/m^2*	*0.2919*	*foot-Lamberts*	*fl*
FORCE and PRESSURE or STRESS				
N	*newtons*	*0.225*	*poundforce*	*lbf*
kPa	*kilopascals*	*0.145*	*poundforce per square inch*	*lbf/in^2*

**SI is the symbol for the International System of Units. Appropriate rounding should be made to comply with Section 4 of ASTM E380.*

ROAD TUNNEL DESIGN GUIDELINES

Table of Contents

Subject **Page**

1-0. Introduction
1-1. Purpose 1
1-2. Scope 1
1-3. Applicability 1
1-4. Terminology 1

2-0. Planning
2-1. Assessment Between Options 2
2,2. Basis of Tunnel Operations 2
2-3. Financial Planning 2
2-4. Procurement Issues Related to Planning 2
2-5. Reliability of Forecasting 3

3-0. Studies & Investigations
3-1. General 4
3-2. Site Condition Investigation 4
3-3. Obstacle Investigation 4
3-4. Geological & Geotechnical Investigation 4
3-5. Investigation for Environmental Protection 5

4-0. Design
4-1. Highway Requirements 6
4-2. Geometry of Center Line 6
4-3. Cross Section 7
4-4. Soft Ground Tunneling 8
Soil Stabilization & Groundwater Control 8
Soft Ground Tunneling Machines 10
NATM / SEM 11
Soft Ground Tunnel Support & Lining 13
Surface Effects of Tunnel Construction 13
Building Protection Methods 14
Design of Tunnel Lining for Shield Tunnels 16
Tunnel Jacking 29
4-5. Rock Tunnels 32
Rock Discontinuities 32
Rock Movement 32
Rock Reinforcement 32
Design of Initial Support 33
Geomechanical Analysis 38
Design of Permanent, Final Linings 43
Excavation Methods 50
Effect of Excavation Method on Design 51
4-6. Mixed-Face & Difficult Ground 52
Instability 52
Heavy Loading 52
Obstacles and Constraints 52
Physical Conditions 52
Mixed-face Tunneling 52
Drill-and-Blast Tunneling 52
TBM Tunneling in Squeezing Ground 52

Subject **Page**

4-7. Shafts 55
Shaft Excavation in Soft Ground 55
Shaft Excavation in Rock 55
Final Lining of Shafts 55
The New Vertical Shield Tunneling Method 55
4-8. Shotcrete 60
Materials 60
Engineering Properties 60
Testing 61
Design Considerations 62
4-9. Immersed Tunnels 62
Structural Design 62
Water Proofing & Maintenance 67
Environmental Issues 68
Hazard Analysis – Accidental Loads 70
Transportation of Tunnel Elements 71
4-10. Cut-and-Cover Tunnel Structures 72
Tunnel Design – Structural 72
Shoring Systems 76
Decking 76
Excavation and Groundwater Control 76
Permanent Shoring Walls & Support 79
Water-tightness 79
4-11. Seismic Design of Tunnels 79
4-12. Lighting 79
4-13. Tunnel Surveillance/Management/Security ... 83
4-14. Fire Precautions 84
4-15. Ventilation 85
4-16. Drainage System 88

5-0. Design of Construction
5-1. Construction Process 90
5-2. Bidding Strategy 92
5-3. Choice of Method 92

References

Appendix A
Frequently Used Tunneling Terms

Appendix B
1. Elastic Closed-form Models for Ground-Lining Interaction.
2. Non-linear Response of Concrete Linings

Appendix C
C1 - Tunnel Boring Machines - Performance Concepts & Prediction
C2 - Tunnel Boring Machines – Photo Gallery

1- 0. Introduction

1-1. Purpose

The purpose of this Road Tunnel Design Guidelines document is to develop a detailed listing of the elements of design, to assist engineers in producing a uniform, satisfactory approach towards the design of a road tunnel project. This document is a prelude toward the development of a Tunnel Design Manual, which will constitute a uniform acceptable national standard, with technical criteria and guidance for road tunnel design and its ancillary disciplines, such as ventilation, lighting, electrical, mechanical and life safety systems.

1-2. Scope

This document presents a detailed list of all design elements necessary to ascertain a satisfactory approach to road tunnel design. Each design element presented, is described with a summary of its purpose and design techniques.

The document also discusses some of the basic issues relating to planning for a road tunnel project, including: assessment between options; procurement issues related to planning; and the reliability of forecasting.

Technical issues relating to type and method of construction, such as: Soft Ground Tunneling, Rock Tunnels, and tunnels in Mixed-face/Difficult Ground, are presented; as are non-technical, contractual issues, such as: the Construction process, Bidding Strategy and Choice of Method.

The design elements presented in this document cover only road tunnels, as distinct from railway, subway and pedestrian tunnels which are not covered by this document.

There are many important non-technical issues relating to underground construction, such as: economics, issues of operation, maintenance, and repair, associated with the conception and planning of underground projects. These issues are not covered by this document.

1-3. Applicability

A team of highly skilled engineers, from many disciplines, is required to achieve an economical tunnel or shaft design, that can be safely constructed while meeting environmental requirements.

This document applies to all states and Municipalities. It will be particularly useful for both young and experienced structural engineers who have not yet had the opportunity to design tunnels.

1-4. Terminology

Appendix A contains definitions of terms that relate to the design and construction of road tunnels.

2.0. Planning

2-1. Assessment between Options

A tunnel option for new roads should be considered to traverse a physical barrier such as a mountain range or river, or areas subject to avalanche, landslides, floods or earthquakes. Tunnels should also be considered for environmental reasons (noise limitation, pollution, or visual intrusion); for protection of areas of special cultural value (conservation of districts or buildings); or ecological reasons (avoidance of a community, or to enhance surface land values).

Planning and design of road tunnel options should initially be to the same highway standards as for open road options, except for differences including: capital, operating and whole life costs; ventilation; lighting and maintenance requirements. The nature and mix of vehicles in the traffic flow will also affect the physical design of tunnels.

The respective merits for the different options are:

a) Internal Finance: Set prime cost, financing costs, maintenance and operational costs, and renewal costs, against revenue (if any);

b) External Costed Benefits: the value of the facility in terms of savings to direct and social costs external to the project;

c) External uncostable Benefits: conservation, ecology, uncostable social benefits;

d) Enabling aspects: The project evaluated as a requisite facilitator of other desirable developments.

2-2. Basis of Tunnel Operation

Consider two categories of tunnel operation:

a) Tunnels with their own dedicated operating management structure and resources; retain responsibility for traffic surveillance and safe operation of the tunnel, including response to incidents and emergencies;

b) Tunnels designed to operate as fully automatic facilities, with no permanent operating and monitoring staff. Such tunnels allow free passage of dangerous goods vehicles operating within the law. Diversion of such vehicles off the freeway system may transfer risk to locations without facilities to deal with any emergency incident involving fire or spillage.

2-3. Financial Planning

Tunnel projects should be constructed for long life (100 to 150 years). Financial planning should consider:

1. Preparation Period, when costs increase to a small percentage of project value, while risk reduces from its initial 'speculative' level;
2. Construction Period, when major expenditure occurs with outstanding construction risk gradually reduced towards zero on completion, or soon thereafter for the consequences of construction;
3. Operation Period, when costs are recovered in revenue or notionally. For Build, Operate and Transfer projects, the period for deriving revenue from operation on transfer to state ownership.

2-4. Procurement Issues Related to Planning

a. If another party will assume responsibility for design (e.g., Design-Build-Operate), make provision for continuity in conceptual planning, to prevent a break in conceptual thinking. This will ensure that benefits are derived from an innovative approach that needs continuity of development into project design.

b. Costs estimates should take into account contractual arrangements, as follows:

   i) For a Partnering Concept – devise optimal means for dealing with risk, with optimal consequences for cost control;

   ii) Where Contractor assumes construction and geological risk – calculate costs against the most unfavorable risk scenario, with a margin for possible litigation. Without equitable risk sharing, potential financial benefits of a competent design process cannot be realized, hence the need for additional allowance for increased cost.

   iii) Cost estimates should be prepared in year-of-expenditure dollars, inflated to the midpoint of construction, with some allowance for schedule slippage taken into account. Reporting the costs in year-of-expenditure dollars will greatly reduce the media and public perception of "cost growth".

   iv) Reasonable contingencies should be built into the total project cost estimate. It is suggested that the following contingencies be included:

- ✓ A construction contingency for cost growth during construction;
- ✓ A design contingency based on different levels of design completion;
- ✓ An overall Management contingency for third-party and other unanticipated changes; and
- ✓ Other contingencies for areas that may show a high potential for risk and change; for example: environmental mitigation, utilities, highly specialized designs, etc.

v) Cost estimates should consider the economic impact of the major project on the local geographical area; for example, material manufacturers that would normally compete with one another may be "forced" to team together in order to meet the demand of the major project. Extremely large construction packages also have the potential to reduce the amount of contractors that have the capability of bidding on the project, and may need to be broken up into smaller contracts to attract additional competition. Bid options (simultaneous procurements of similar scopes with options to award) should also be considered for potential cost savings resulting from economies of scale and reduced mobilization. A Value Analysis should be performed on the project to determine the most economical and advantageous way of packaging the contracts for advertisement.

2-5. Reliability of Forecasting

For subsurface projects, the site-specific nature of the ground further compounds the uncertainties of financial forecasting. The main areas of uncertainty, listed below, should be qualified in estimates:

- Politics;
- Competence and agenda of source of estimates;
- Timing of completion;
- Development of competitor projects / technology;
- Ranges and qualifications
- Attention to climate of risk;
- Potential changes in requirements;
- Contractual relationships;
- Bidding process

3.0. Studies & Investigations

3-1. General

Investigations should be conducted to obtain data for planning, design, construction and maintenance.

3-2. Site Condition Investigation

Site condition investigation should be conducted to select tunnel route, judge suitability of tunnel methods, size of the tunnel, and should cover local conditions along the tunnel alignment related to:

a. Land usage and related property rights, including encumbrances and restrictions on surface/underground land usage
b. Future development plans along the route, including their scale and schedules;
c. Road classification and traffic conditions; to aid in determining vertical shaft locations;
d. Difficulty of land use for construction; e.g., construction yard around a vertical shaft;
e. River, lake and sea conditions; including cross-section, structure of its banks, etc.
f. Availability and capacity of power, water and sewage connection for construction.

3-3. Obstacle Investigation

Obstacle investigation should be conducted to identify the following items:

a. Existing surface and underground structures; including foundation type, basements and structures with sensitive instruments;
b. Existing underground utilities;
c. Wells in use and abandoned wells to assess risk of blowout/leakage of slurry, oxygen-deficient air.
d. Sites of removed structures and temporary works, including contaminated soils and groundwater.

3-4. Geological & Geotechnical Investigations

Geological and geotechnical investigation should be conducted to determine topography; geological formations; soil conditions; and groundwater. Special investigation needs related to construction method are summarized in Table 3-1. The level of Geotechnical effort should be as recommended by the US National Committee on Tunneling (USNC/TT, 1995); the top two recommendations are:

1. Site exploration budgets should average 3% of estimated project cost;
2. Boring footage should average 1.5 linear ft (0.5 linear m) of borehole per route ft (m) of tunnel.

Table 3-1 Special Investigation needs Related to Construction Method (after Bickel et al.)

Construction Method	Special Requirements
Drill & Blast	Data to predict stand-up time for size and orientation of tunnel
Rock TBM	Data to determine cutter costs, penetration rate, predict stand-up time to determine if open-type machine or full shield is needed and groundwater inflow.
Conventional TBM Shield	Stand-up time important tor face stability and the need for breasting at the face, and to determine requirements for filling tail void. Fully characterize potential mixed-face conditions.
Pressurized-face TBM	Reliable estimates of groundwater pressures, strength and permeability of soil to be tunneled. Predict size distribution and amount of boulders, and characterize mixed-face conditions.
Road header	Data on jointing to evaluate if road header will be plucking out small joint blocks, or must grind rock away. Data on hardness of rock essential to predict cutter/pick costs.
Immersed Tube	Soil data for dredged slope design, prediction of dredged trench rebound, and settlement of completed immersed tube structure. Testing should emphasize rebound modulus (elastic and consolidation) and unloading strength parameters. Soil strength determination for slope and bearing evaluations. Exploration to assure that all potential obstructions and rock ledges are identified, characterized and located. Characterize contaminated ground.
Cut and Cover	Plan exploration to determine best and most cost-effective location to change from cut-and-cover to true tunnel mining construction
Construction Shafts	One boring at each proposed shaft location.
Access, Ventilation Other Permanent Shafts	Data to design permanent support and groundwater control measures. One boring per shaft.
Solution-Mining	Chemistry to estimate rate of leaching; undisturbed core for long-term creep test for cavern stability analyses.
Pipe Jacking and Microtunneling	Data to predict soil skin friction and to determine excavation method and support needed at the heading.
Compressed Air	Drill boring off of alignment; grout boring so compressed air is not lost up old borehole should tunnel encounter old boring.
Portal Construction	Data to determine portal location and design temporary and final portal structure.
NATM	Comprehensive geotechnical data and analysis to predict behavior and classify ground conditions and ground support systems into categories based on behavior.

3-5. Investigation for Environmental Protection

The following items should be investigated, as the need arises, in order to protect the environment, during and after tunnel construction:

a. *Noise and Vibration*

Should be monitored both prior to and during construction to evaluate those generated just by tunnel construction

b. *Ground Movements*

Condition of the ground and structures along the alignment should be surveyed and monitored, during and after construction, in order to quantify degree of ground heave / subsidence and effect on structures along tunnel route.

c. *Groundwater*

Use of wells, water level and quality of the wells, and spring water in the sphere of influence should be surveyed. Timing of survey and the construction should be compared to account for seasonal fluctuation in groundwater level.

d. *Oxygen-deficient Air and Hazardous Gases*

Such as methane; oxygen-deficient air resulting from oxidation of iron content and organic material in soil may be pushed into nearby wells and basements by application of the pneumatic shield tunneling method. Therefore, locations of wells, their water levels and basement structures to be potentially affected should be investigated prior to construction and the leakage of oxygen-deficient air should be monitored during construction. Existence of hazardous gases, such as methane should be investigated prior to construction by borings. If detected, its concentration should be measured and monitored prior to, and during, construction.

e. *Chemical grouting*

Water quality in wells and rivers that will be potentially affected by leakage of injected chemical grout or slurry from shield tunneling should be surveyed and monitored for any changes during construction

f. *Construction By-products*

Reduction and recycling of construction by-products should be encouraged for smooth construction operations and preservation of the environment.

4.0. Design

4-1. Highway Requirements

Highway requirements for road tunnels vary according to the tunnel situation and character (urban, interstate, sub aqueous or mountain), and whether long or short. Standards for lane and shoulder width, and vertical clearance for highways, should be as established by the FHWA and AASHTO according to classification (Figure 4-1A).

a. *General* -- In addition to width of traveled lanes, left and right shoulders should be provided flush with pavement surface.

   Horizontal clearances on curved tunnels should be increased to provide sight distances past the tunnel wall.

   In lieu of maintenance walks, closed circuit television camera surveillance is used, and lanes are closed when maintenance access is required.

b. *Urban Underpasses* – the straightest practicable line should be adopted and gradients should be restricted, if possible, to less than 3-4%, because steeper gradients give rise to congestion when large, heavily loaded vehicles are ascending;

c. *Interstate Highway* Tunnels – Tunnel line and gradients should conform to standards specified for the interstate: sight lines appropriate to the design speed should require particular care, especially where vertical curves are necessary. Design speed should be greater than 60 mph (97 kmph), unless otherwise restricted in urban areas; the minimum radius of curvature should not be less than 1,500 ft (457 m).

d. *Sub aqueous Tunnels* – line should be fixed nearly at right angles to the waterway, to minimize tunnel length, unless valley topography imposes another alignment. As with urban tunnels, any gradient exceeding 3-4% slows heavy traffic disproportionately. Tunnel profile will usually comprise a descending gradient, a nearly level central gradient and a rising gradient. Vertical curves required at changes of gradient should be as long as practicable, to simplify construction if a shield is used, and to avoid restricting the line of sight in the tunnel approaching the change of gradient.

e. *Mountain Tunnels* – The geometry should be related to the topography and geology in order to design and ensure the stability of cuttings, embankments, viaducts and portals leading to tunnels.

4-2. Geometry of Center Line

The principal factors determining the center line include: the relative positions of the portals and directions of approach; geology; clearances from external obstacles; gradients; vertical curves; and horizontal curves.

a) *Approaches* – For very short and simple tunnels, align the tunnel in a straight line joining the portals, otherwise introduce curves to suit the approaches, and varying gradients to carry it under and around obstacles.

b) *Geology* – The choice of the most suitable strata for tunneling will influence the alignment, as may the avoidance of water-bearing ground or unstable rock.

c) *Clearance from External Obstacles* -- As a broad generalization, it is usually satisfactory if uniform undisturbed ground outside the tunnel extends for one tunnel diameter; more careful analysis is required if discontinuities and obstructions occur within this zone.

d) *Gradients* – A steep gradient should not be used for highway tunnels because heavy vehicles resort to use of their lowest gears, reducing traffic capacity and increasing demand on the ventilation system. Gradients should be limited to 3-4%. A minimum gradient should be specified (0.25%, usually) to ensure longitudinal drainage of the roadway.

e) *Vertical Curves* – Changes of gradient are normally small in interstate highway tunnels and mountain tunnels, and connecting curves are correspondingly short, and should follow applicable roadway geometry specifications..

f) *Horizontal Curves* – In plan, curves may be necessary to align the tunnel with its approach roads and to avoid obstacles in the ground. The same considerations apply in determining the radius as in surface roads: design speed, centrifugal force, super elevation, and line of sight.

   On very sharp curves, some extra lane width for long vehicles is desirable, but may be prohibitively expensive.

4-3 Cross Section

General – The cross section is determined by the space required for traffic, space required for other facilities, and by construction methods.

a) *Traffic Space* – This should be defined by the lane width and maximum load height of vehicle. The minimum normal tunnel will accommodate two lanes of traffic. Three-lane tunnels are not uncommon where a rectangular section is used, in cut-and-cover construction, or in immersed tubes. However, the circular form is generally not used for three or more lanes.

b) *Other Space* – Walkways are sometimes still used for inspection, maintenance, and emergency use for access to the site of an accident and for escape. Additional space may also be necessary for ventilation ducts. In a circular tunnel, the spaces beneath the roadway and above the clearance line are available without extra excavation, and in a horseshoe tunnel there is normally a substantial area in the crown; but in a rectangular structure, extra width or depth must be excavated. In a river crossing, the accommodation of water mains, gas mains, electric power cables, or other services, are often required. These are usually installed in the under-road space in a circular tunnel, but at the expense of reducing the area available for ventilation and increasing the necessary fan power to overcome the friction and turbulence generated.

c) *Cyclists and Pedestrians*

In the construction of some tunnels, there is a demand for crossing facilities for cyclists and pedestrians. This can be disproportionately costly if incorporated in a vehicular traffic system.

Other facilities, in addition to ventilation, to be incorporated within the tunnel are the services for the tunnel itself: lighting, emergency services such as telephones and fire alarms, fire mains, air quality monitoring devices and visibility, public address systems, traffic lights and signals, drainage and pumping. Reference should be made to National Fire Protection Association (NFPA) Standard 502 (2001).

d) *Construction Requirements*

The shape of a highway tunnel, whether rectangular, circular or horseshoe in form, is dictated by the method of construction adopted to suit the ground conditions.

For cut-and-cover, the rectangular shape is usual; for rock to be excavated by blasting, the horseshoe or other arched form is common; for excavation by full face machine, usually, the circular form pertains; and likewise for most soft ground sub aqueous tunnels (other than submerged tunnels). In long mountain tunnels, a rising gradient is preferred to simplify drainage during construction; in shield-driven tunnels, sharp curves, horizontal or vertical, present difficulties in steering the shield and building the lining.

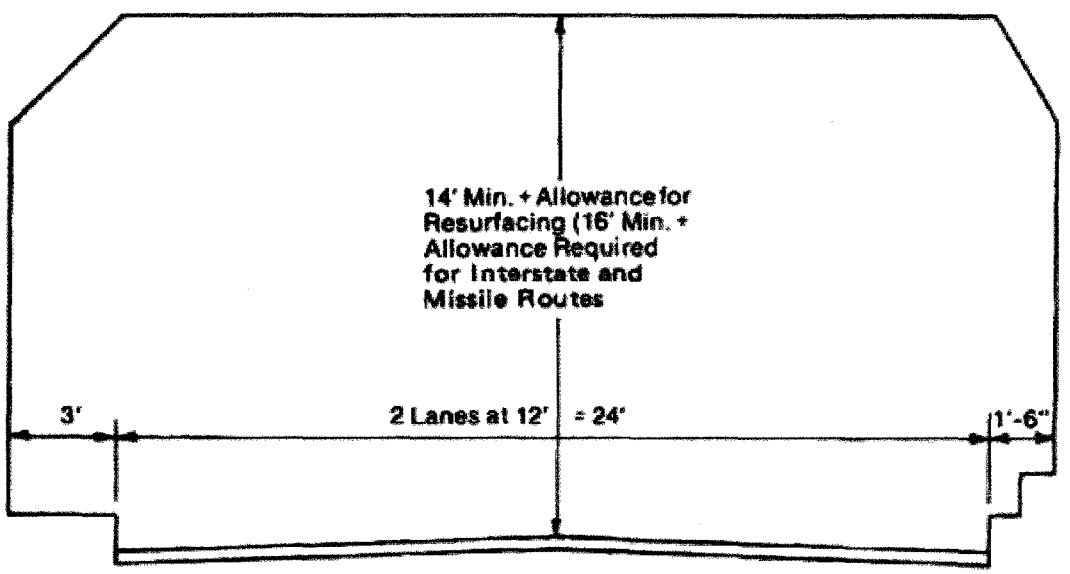

Note: 1 ft = 0.3048m

Figure 4-1 A – AASHTO Clearances for a Two-lane Primary Highway

4-4. Soft Ground Tunneling

General – Soft ground requires support as soon as possible after excavation, in order to maintain stability of the excavation. In dense urban areas, limiting settlement is necessary in order to avoid damage to overlying structures.

Control of groundwater is also important in soft ground tunneling. While groundwater above the water table increases stand-up time in granular soil, below the water table, it reduces effective strength, and seepage forces can cause failure in such soil. In cohesive soils, groundwater determines strength, sensitivity and swelling properties, which control design of the final lining.

Table 4-1. Tunnel Behavior: Sands and Gravels
(Terzaghi, 1977)

Designation	Degree of Compactness	Tunnel Behavior	
		Above Water Table	Below Water Table
Very Fine Clean Sand	Loose, $N \leq 10$	Cohesive Running	Flowing
	Dense, $N > 30$	Fast Raveling	Flowing
Fine Sand with Clay Binder	Loose, $N \leq 10$	Rapid Raveling	Flowing
	Dense, $N > 30$	Firm or Slowly Raveling	Slowly Raveling
Sand or Sandy Gravel with Clay Binder	Loose, $N < 10$	Rapid Raveling	Rapidly Raveling or Flowing
	Dense, $N > 30$	Firm	Firm/slow Raveling
Sandy Gravel and Medium to Coarse Sand		Running Ground. Uniform ($C_u < 3$) and loose ($N < 10$) materials with round grains run much more freely than well graded ($C_u > 6$) and dense ($N > 30$) ones with angular grains.	Flowing Conditions combined with extremely heavy discharge of water.

a) *Soil Stabilization & Groundwater Control* – Consider the following four methods to control groundwater:

1) Dewatering;

2) Compressed air;

3) Grouting;

4) Freezing.

Figure 4-1 shows the applicable methods of controlling groundwater in terms of soil permeability and grain size.

Figure 4-1 – Methods of Controlling Groundwater (after Karol, 1990)

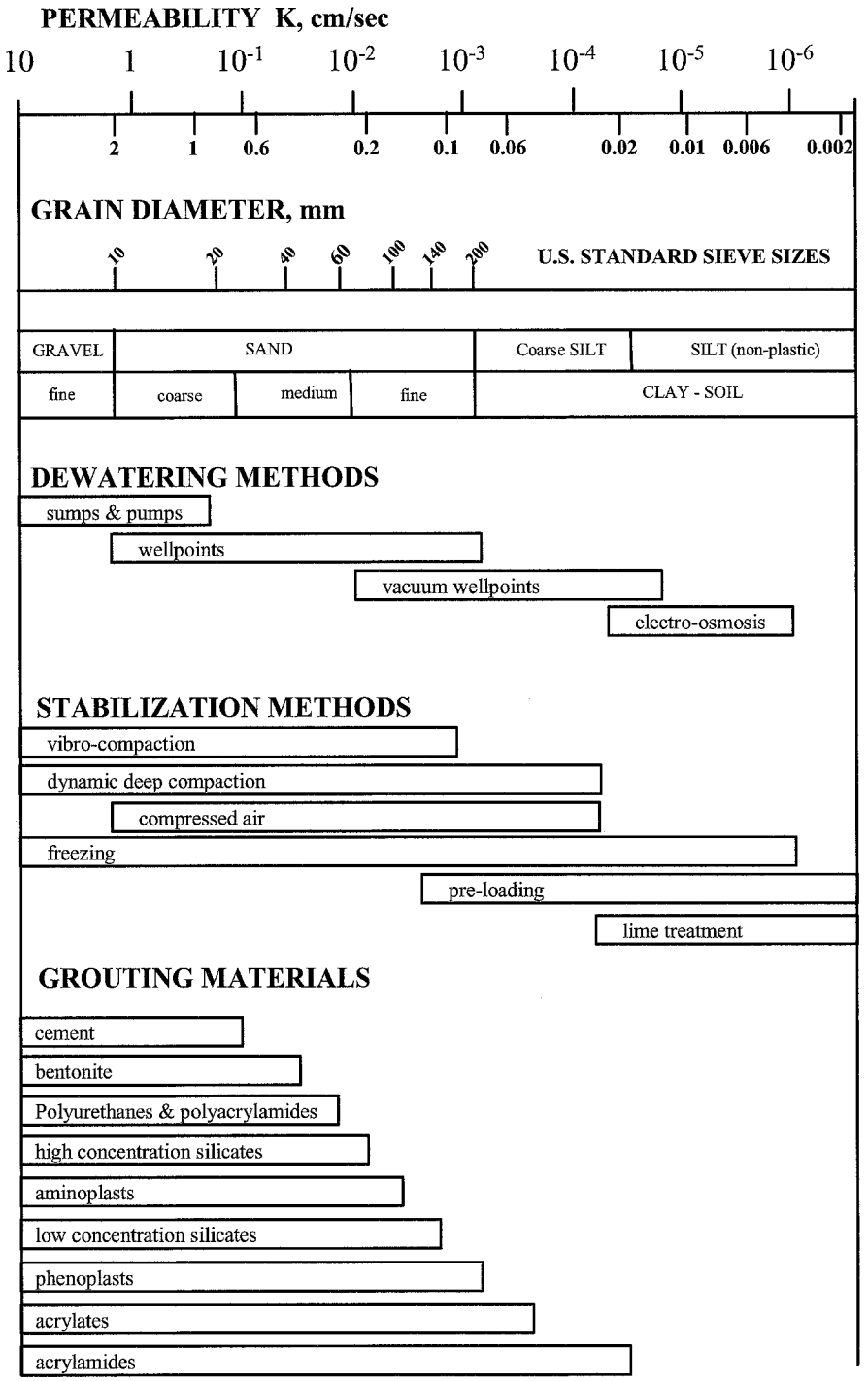

Note: 1 cm/sec = 0.4 in/sec; 1 mm = 0.04 in.

b. *Soft Ground Tunneling Machines*

To enable safe and economical construction of a tunnel in soft ground, TBM and method selection should be based on appropriate consideration of soil conditions, water conditions, surface conditions, tunnel size, construction length, tunnel alignment, support system, excavation conditions, excavation environment, and construction period.

The following table shows today's TBM family of machines. It should be noted that, in addition to TBMs used on road tunnel construction, the table includes those used on other types of construction projects (viz. the Pipe Jacking and SBU machines).

Appendix C1 presents performance concepts and prediction for TBMs to be considered during design and in reviewing selection.

Appendix C2 presents photographs of some TBMs, including some specialized machines currently gaining particular acceptance in Japan.

In Japan, there are several innovative approaches to shield tunneling, e.g. the Double-O-Tube or DOT Tunnel. This tunnel looks like two overlapping circles. There are also shields with computerized arms which can be used to dig a tunnel in virtually any shape. Photos of some of these innovative machines are also presented in Appendix C2. A special section on the design of tunnel lining for shield tunnels is presented in Chapter 4-4g.

It should be noted that TBM tunneling methods are also presented under Rock Tunnels (Chapter 4-5); Mixed-face and Difficult Ground (Chapter 4-6); and Shafts (Chapter 4-7).

TBM FAMILY OF MACHINES
(From Kessler & Moore,)

Machine Type	Typical Machine Diameters	Ground Condition TBM is Best Suited For
Pipe Jacking Machines	Up to approx. 10 – 13 ft (3 - 4m)	Any ground
Small Bore Unit (SBU)	Up to 6.6 ft (2m)	Any ground
Shielded TBMs	6.6 – 46 ft (2 to 14m) plus	Soft ground above the water table
Mix Face TBMs	6.6 – 46 ft (2 to 14m) plus	Mixed ground above the water table
Slurry TBMs	6.6 – 46 ft (2 to 14m) plus	Coarse-grained soft ground below the water table
EPB TBMs	6.6 – 46 ft (2 to 14m) plus	Fine-grained soft ground below the water table
Hard Rock TBMs	6.6 – 46 ft (2 to 14m) plus	Hard rock
Reamer TBMs	Various	Hard rock
Multi-head TBMs	Various	Various

Figure 4-2 summarizes the different configurations of open and closed shields. Figure 4-3 presents a

Flow Chart of Shield Method Selection.

c) *NATM/SEM*

This tunneling method, pioneered by the Austrians in the later half of the twentieth century, is variously known as: 'New Austrian Tunneling Method' (NATM), 'Sequential Excavation Method' (SEM), and 'Sprayed Concrete Lining'.

In soft ground tunneling, ground support must be placed immediately after excavation. As long as the ground is properly supported, NATM construction methods are appropriate for soft ground conditions.

The tunnel is sequentially excavated and supported, and the excavation sequences can be varied. In soft ground tunnels, initial ground support in the form of shotcrete, usually with lattice girders and some form of ground reinforcement, is installed as excavation proceeds, followed by installation of a final lining at a later date. The permanent support is usually, but not always, a cast-in-place concrete lining.

In cases where soft ground conditions do not favor an open face with a short length of uncompleted lining immediately next to it (flowing ground or ground with a short stand-up time), a ground arch does not develop. Unless such unstable conditions can be modified by dewatering, spiling, grouting, or other methods of ground improvement, closed-face shield tunneling methods, and not NATM, should be considered appropriate.

A generalized design approach to modeling the excavation process for a NATM tunnel is shown in Figure 4-4.

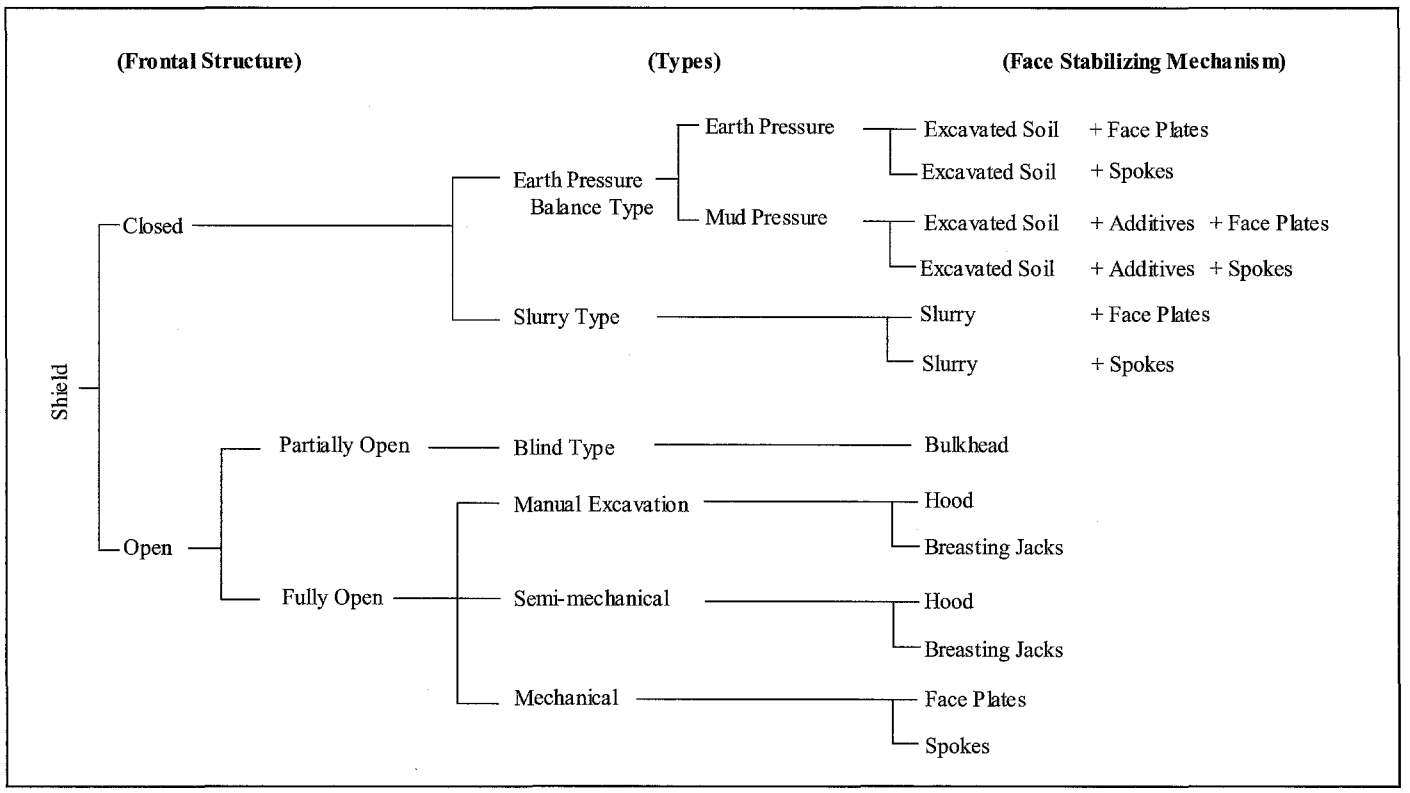

Figure 4-2 – Types of Shield (After JSCE, 1996)

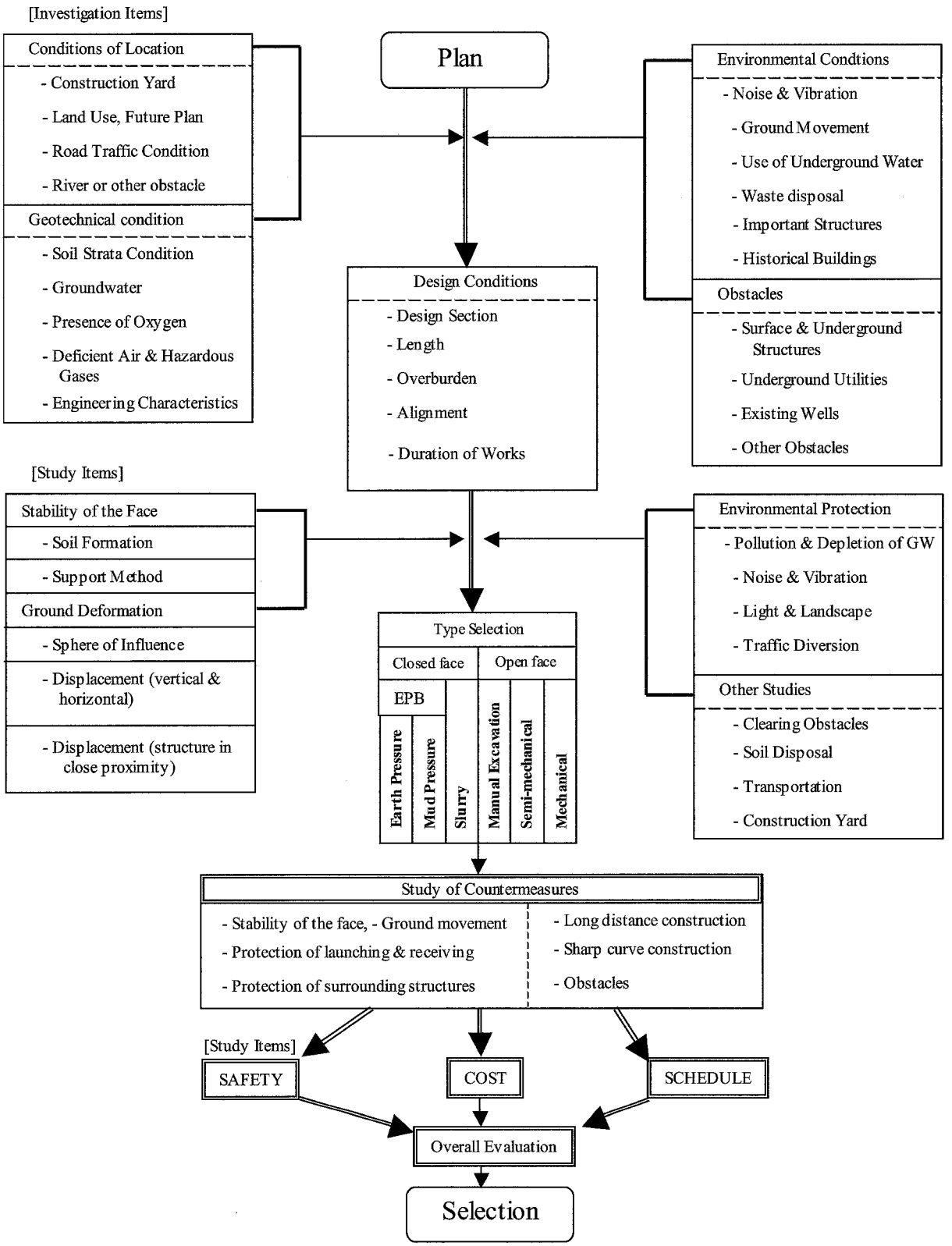

Figure 4-3 – Flow Chart of Shield Method Selection (After JSCE, 1996)

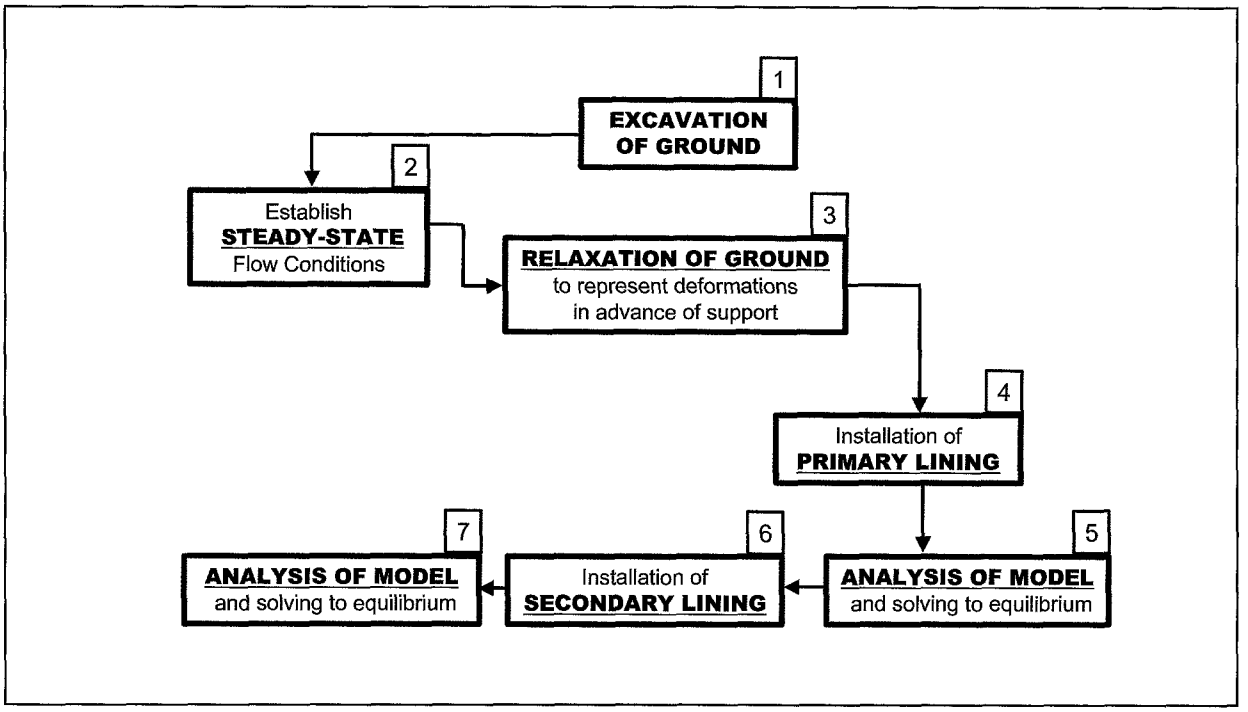

Figure 4-4 – NATM -- Modeling the Excavation Process (Generalized 2D Approach)

d) *Soft Ground Tunnel Support & Lining*

A lining should be designed to:

i) withstand loads on the tunnel safely; in general, the primary lining is responsible for supporting loads on the tunnel;

ii) retain the transportation function for the purpose of tunnel use; facilitate maintenance and management of the tunnel once it is put into service. This requires a study of watertightness, waterproofing and durability of the linings;

iii) be suitable for tunnel construction conditions; should sustain jack thrust for advancing a shield machine, withstand the backfill grouting pressure, and function as a tunnel lining structure immediately after the shield is advanced.

Three types of initial support systems will be considered: 1) Ribs and Lagging; 2) Unbolted, Precast Concrete Segments, and 3) Bolted (or pinned) Precast Concrete Segments. Interaction between support system and the surrounding ground is crucial, and depends on early contact between the two to stop the ground from moving (raveling, running, shearing or squeezing). The contact is obtained (except where supported by shotcrete) by expansion of the support system, contact grouting between the excavated tunnel surface and the support system or a combination of the two.

Two-pass Lining Scheme -- The first two types of initial support system will later incorporate a final lining of cast-in-place concrete, used to provide design-life support (ribs and lagging scheme); sandwich drainage fabric or water-proofing membrane (both schemes); and provide the requisite inner surface of the tunnel for user requirements

One-pass Lining Scheme – The scheme incorporating bolted (or pinned) precast concrete segments usually does not have a final lining, unless a nominal one is dictated by user requirements.

e) *Surface Effects of Tunnel Construction*

The tunnel engineer should minimize the extent and impact of tunnel-related settlement produced at the ground surface / structures overlying the tunnel (the contractor has most of the control through selection of tunneling methods and equipment). Water table depression occurs because the tunnel functions as a groundwater drain and increases effective stress, causing settlement. In sands and gravels, settlements are generally small, and should be approximated by elastic theory. In clay, silt, or peat, settlements are generally greater, and should be approximated by consolidation theory.

The three forms of ground loss in soft ground tunneling are:

- Face Losses – soil movement out in front of the shield and into the shield, through raveling, caving, flowing, running, or squeezing;
- Shield Losses – soil movement toward the shield between the cutting edge and tail, as a result of the shield plowing, pitching, or yawing, and from the void created by overcutters;
- Tail Losses – soil movement toward the support system as it leaves the shield's tail, resulting from soil moving to fill the tail void created by the volume of the tail skin plate and incomplete support expansion, and delay in grouting.

Figure 4-5(i) shows the properties of the probability curve as used to represent cross section of the settlement trough above the tunnel (see Bickel et al. [1996] for greater details).

Figure 4-5(ii) defines the parameter *i*, which represents the width of the settlement trough - the horizontal distance from the location of maximum settlement to the point of inflection of the settlement curve. The maximum value of the surface settlement is equal to the volume of surface settlement divided by 2.5i.

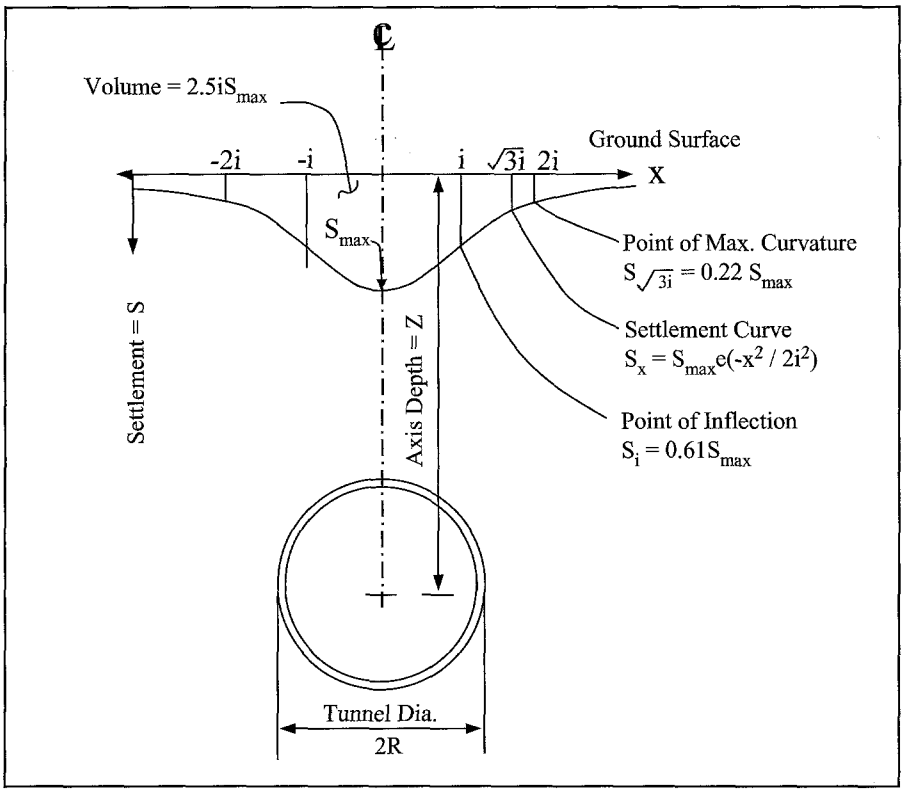

Figure 4-5(i) – Cross Section of Settlement Trough Above Tunnel *(Adapted from Peck, 1969)*

f) *Building Protection Methods* -- The Tunnel Engineer should require the use of tunneling equipment and methods that reduce lost ground, including:

- Full and proper face control at all times, especially while shoving the shield;
- Limiting the length –to-diameter ratio for the shield, making directional control easier and reducing the effects of pitch and yaw;
- Rapid installation of ground support;
- Rapid expansion, pea-gravelling, and/or contact grouting of ground support;

In special cases, other steps may include:

- Use of compressed air;
- Consolidation grouting of the ground before tunneling
- Consolidation grouting from the tunnel face;
- Compaction grouting between tunnel and foundations;
- Underpinning structures by various methods.
- Use of protective walls, including: slurry walls or soil-cement structural walls embedded below the tunnel.

See Cording & Hansmire (1975) for detailed examples of actual measurements of ground movement about tunnels in sand;

See Palmer & Belshaw (1979, 1980) for detailed examples of ground movement about tunnels in clay.

Results of the wide variety of existing evaluation methods of the influence of tunnel-induced settlement on buildings are surprisingly consistent; Table 4-5i shows limiting angular distortion for various categories of potential damage.,

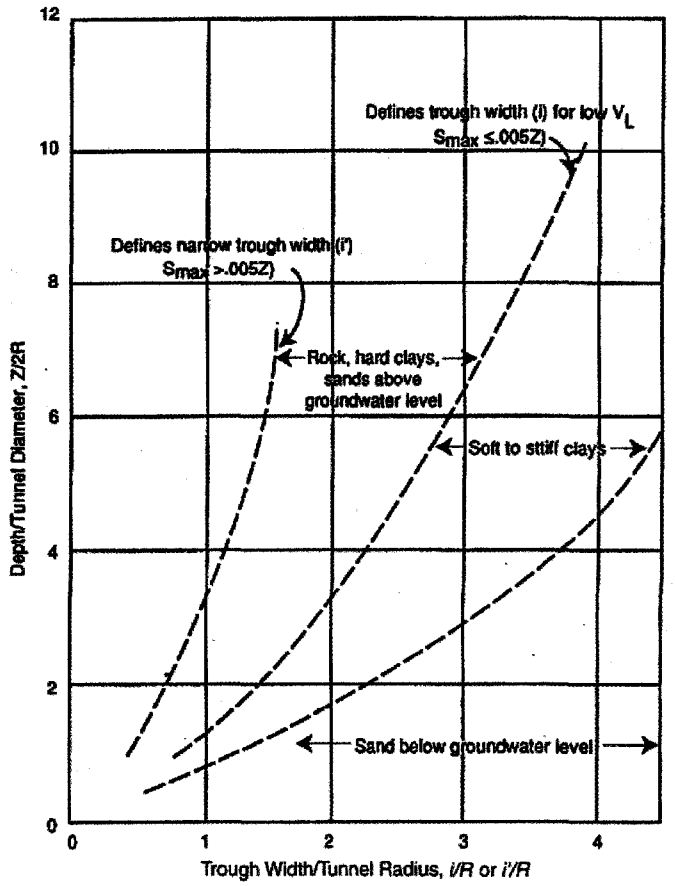

Figure 4-5 (ii) – Assumptions for Width of Settlement Trough (Adapted from Peck, 1969)

Table 4-5 (i) Limiting Angular Distortion, Wahls, 1981	
Category of Potential Damage	**Angular Distortion**
Damage to machinery sensitive to settlement	1/750
Danger to frames with diagonals	1/600
Safe limit for no cracking of building [a]	1/500
First cracking of panel walls	1/300
Difficulties with overhead cranes	1/300
Tilting of high rigid building becomes visible	1/250
Considerable cracking of panel and brick walls	1/150
Danger of structural damage to general building	1/150
Safe limit for flexible brick walls [a]	1/150
[a] Safe limit includes a factor of safety	

g) Design of Tunnel Lining for Shield Tunnels

This Section covers the basic requirements of design of the tunnel lining for shield tunnels; while it addresses tunnels with a circular cross section, with appropriate modifications, it can be applicable to other shield tunnel shapes. An excellent reference would be the JSCE's Japanese Standard for Shield Tunneling (1996). Note that the design of initial support and design of permanent, final linings are addressed in Sections 4.5e and 4.5g, respectively.

Definitions & Terminology

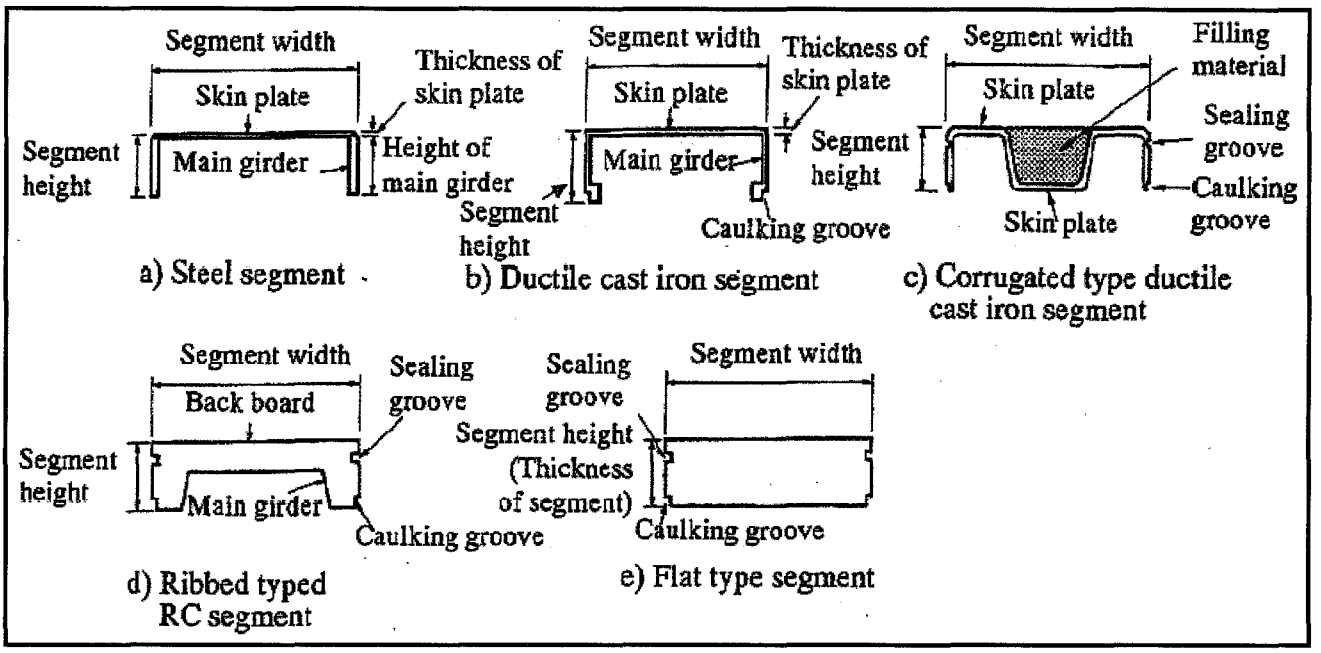

Figure A – Cross Section of Segments

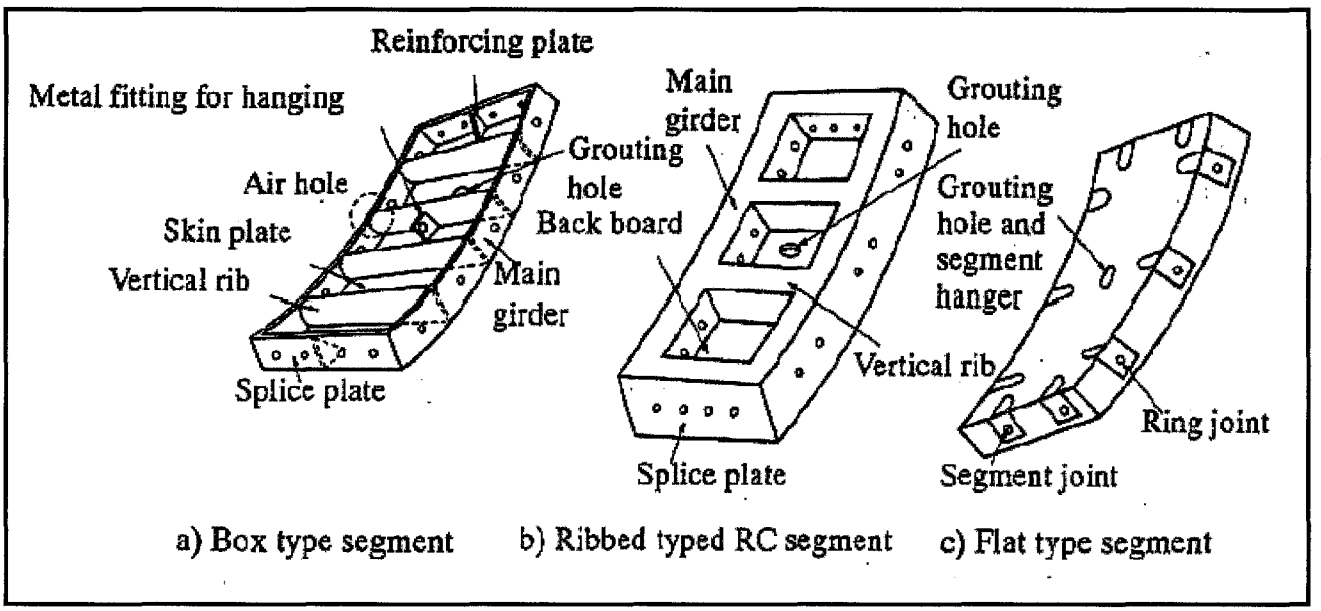

Figure B – Segment Parts

Terminology

A) Types of Segments

The five types of segments are described below and shown in Figures A and B:

1. *Box-Type Segment* – A generic name for the steel segment with a re-entrant enclosed with the main girders and the splice plates or the vertical ribs;
2. *Ductile Cast Iron Segment* – A Box-Type Segment made of spheroidal graphite cast iron;
3. *Ribbed Type RC Segment* --- A Box-Type Segment made of concrete.
4. *Corrugated Type Segment* – A Ductile Cast Iron Segment with outer re-entrant filled with solid material.
5. *Flat Type Segment* – Reinforced concrete segments in the shape of a flat plate with a solid body; term also used for composite segments in which the concrete segment is entirely covered with steel plate or reinforced with steel sections instead of reinforcement bars.

B) Segment Parts

The different parts of a segment are defined in Figure B

C) Segmental Ring Components

Segmental Ring Components – A Segment, B Segment and K Segment -- are defined in Figure E.

As shown in Figure F, there are two types of K segment, depending on the direction of insertion.

D) Joint Assemblies

1. *Straight Joint Assembly* – When segment joints are arranged in the direction of the tunnel axis;
2. *Staggered Joint Arrangement* – When segment joints are arranged in a staggered pattern.

E) Tapered Ring

As defined in Figure C, a tapered ring has a taper which allows the lining to adapt itself to a specific curvature. The taper is the difference between the maximum and minimum lengths of the tapered ring.

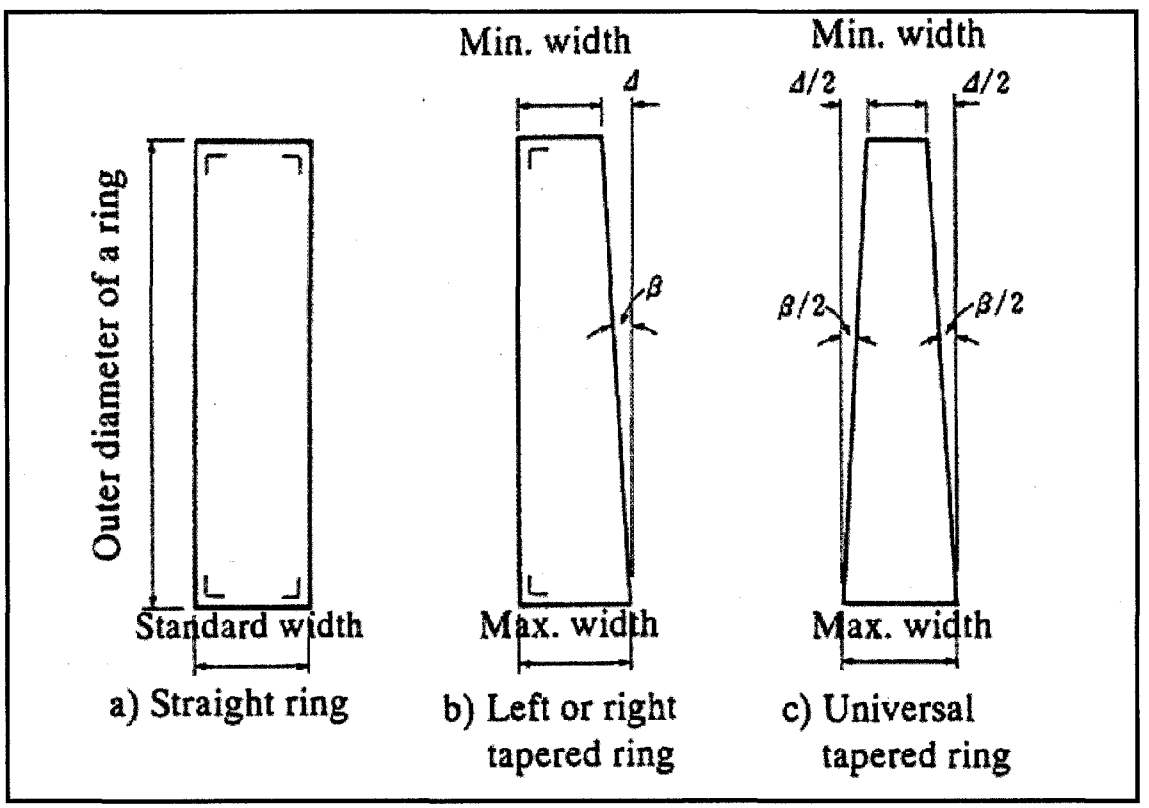

Figure C – Tapered Ring

Cross sections of segmental rings are shown in Fig. D.

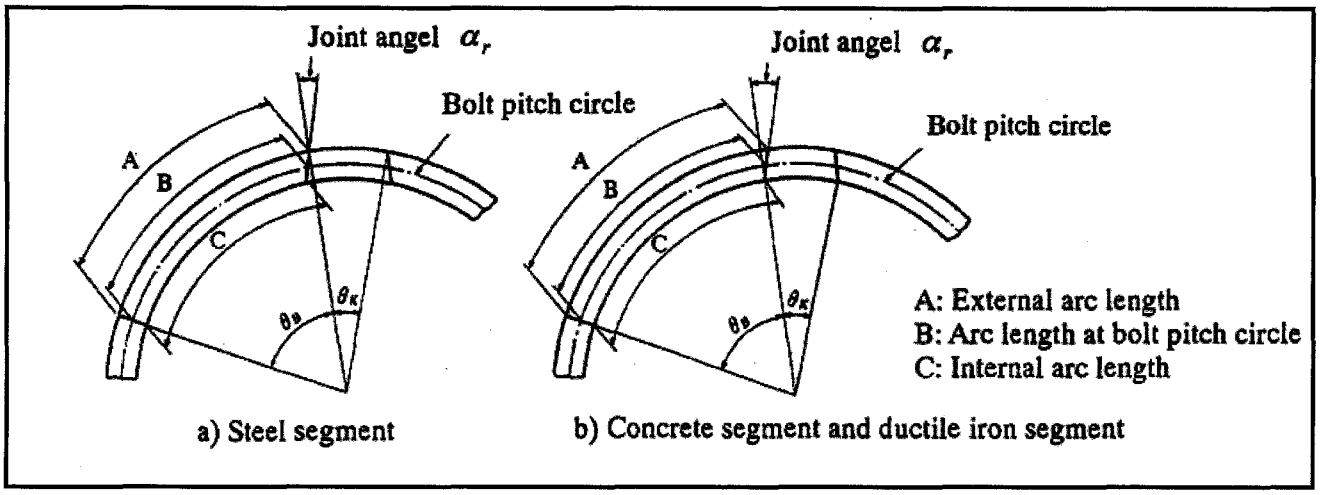

Figure D – Cross Section of Segmental Ring

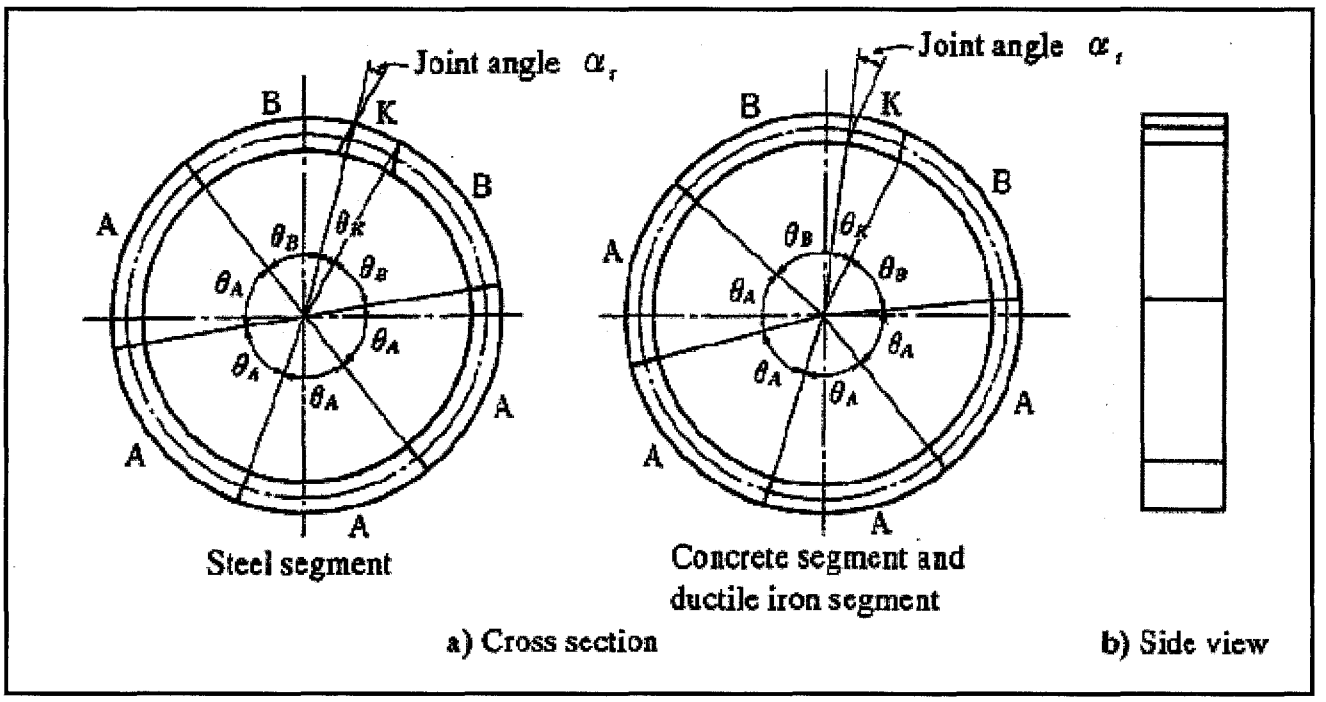

Figure E – Segmental Ring Components

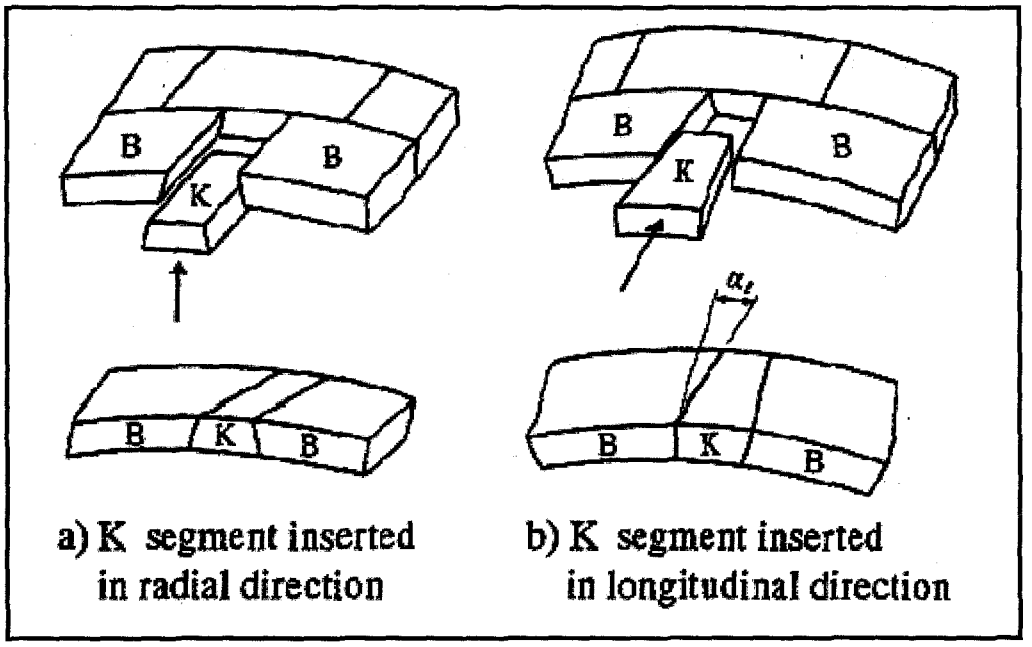

Figure F – Types of K Segment

Notation

The notation used for the structural calculation of the lining is defined as follows:

E_C, E_S, E_D: Modulus of elasticity of concrete, steel and ductile cast iron

I: Moment of inertia

M, N, Q: Bending moment, axial force and shear force (for member forces, the directions indicated in the figure below are assumed to be positive

η: Effective ratio of bending rigidity (EI)

ζ: Transfer ratio of bending moment

R_O, R_C, R_i: Outer radius, radius of centroid, and internal radius of the primary lining

h_1, h_2: Thickness (height) of the primary lining and the secondary lining

B: Width of segment

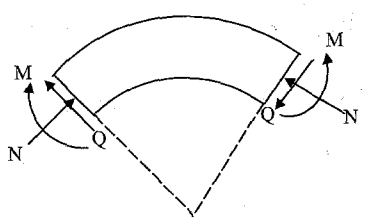

Bending Moment, Axial Force and Shear Force

υ: Angle at the point of calculation of member forces, etc. (angle measured clockwise from the tunnel crown is assumed to be positive)

γ, γ' γ_w: Bulk density of soil, submerged weight of soil and specific weight of water

H: Earth cover (overburden depth) measured from the tunnel crown

H_w: Height of groundwater table from the tunnel crown

P_0: Surcharge

W_1, W_2: Dead weight of the primary lining and the secondary lining (per unit length in longitudinal direction)

g_1, g_2: Dead weight of the primary lining and the secondary lining along the centroid of lining (per unit length in longitudinal direction)

p: Intensity of vertical load

q: Intensity of horizontal load

λ: Coefficient of lateral earth pressure

κ: Coefficient of soil reaction

δ: Deformation of lining (inward deformation assumed positive)

c: Cohesion of soils

ω: Internal angle of friction of soils

υ_A, υ_B, υ_K: Internal angles of A, B, and K segments

Figure 5A shows how the notation is used in the Total Stress and Effective Stress methods

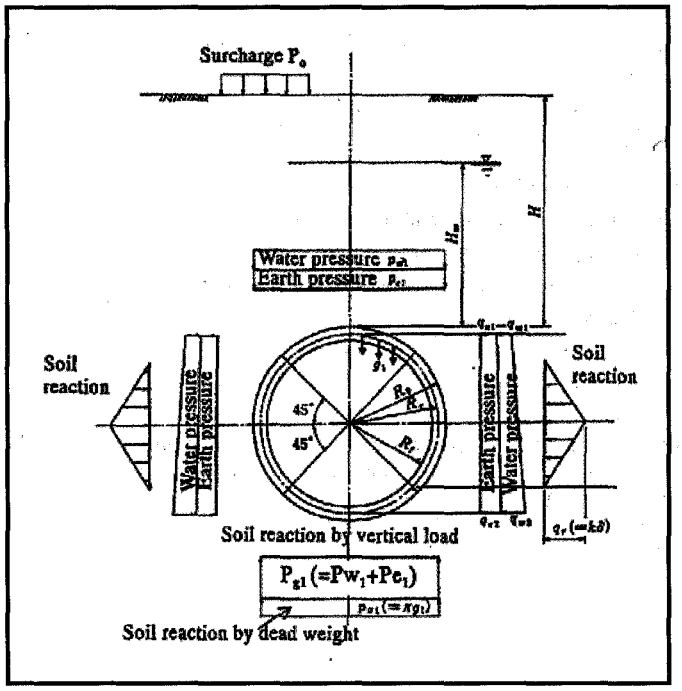

Fig. 4-5A – Example of notation in Total Stress and Effective Stress Methods (after JSCE, 2001)

Basis of Design – The lining design should be based on safety considerations, and should be in compliance with the purpose of tunnel usage and should be carried out by the allowable stress design method with the condition that adequate and proper construction is executed using good quality materials.

Design Loads – The following loads should be considered in designing the lining of the shield tunnel:

a) Vertical and horizontal earth pressure
b) Water pressure
c) Dead Weight
d) Effects of surcharge
e) Soil reaction
f) Internal Loads
g) Construction Loads
h) Effects of Earthquake
i) Effects of two or more shield tunnels in construction
j) Effects of concurrent construction works in the vicinity
k) Effects of ground subsidence
l) Other effects.

Classification of Loads – The loads should be classified as follows:

- Primary Loads -- Loads *a)* through *e)*; should always be considered in designing the lining;
- Secondary Loads -- Loads *f)* through *h)*; should be considered as acting during construction or after completion of the tunnel. They should be taken into account according to the objective, the conditions of construction and location of the tunnel.
- Special Loads -- Loads *i)* through *l)*; are to be specifically considered according to the conditions of the ground and tunnel usage.

Vertical and Horizontal Earth Pressure –

- Depending on the ground conditions, groundwater pressure should be considered by using either the Effective Stress method or the Total Stress method;
- The vertical earth pressure should be the uniform load acting on the tunnel crown. Its magnitude should be determined considering the overburden, the cross section and the outer diameter of the tunnel, and ground conditions;
- The horizontal earth pressure should be the uniformly varying load acting on the centroid of the lining from the crown to the bottom of the tunnel. Its magnitude is the product of the vertical earth pressure and the coefficient of lateral earth pressure.

Applicability of Loosening Pressure – For cases where the depth of overburden (H) is greater than the tunnel diameter (D_0 = outer diameter of the segmental ring), the loosening pressure can be used for the design vertical earth pressure because of the relevance of soil arching effect. The loosening pressure should be adopted in the following cases:

Sandy Soil – for H > 1-2 D_0

Cohesive Soil – for H > 1-2 D_0, and tunnel in stiff clay with N > 8

Figure 4-5B summarizes the loosening pressure.

The loosening width for sections other than the circle can also be calculated from the expression of Terzaghi, if the loosening width (B_1) can be suitably evaluated. However, in such cases, the distribution of the load needs to be carefully decided as it may vary according to the configuration of the tunnel cross section. For such cases the designer should refer to results of field measurements along with data on earth pressure and groundwater pressure, etc, in similar ground conditions.

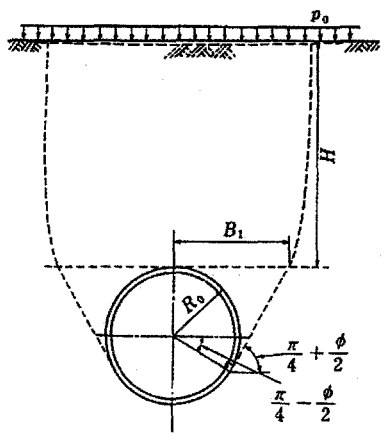

$$\sigma_v = \frac{B_1(\gamma - c/B_1)}{K_o \tan\phi}\cdot\left(1 - e^{-K_0 \tan\phi \cdot H/B_1}\right) + po \cdot e^{-K_0 \tan\phi \cdot H/B_1}$$

$$B_1 = R_o \cdot \cot\left(\frac{\pi/4 + \phi/2}{2}\right)$$

σ_v :Terzaghi's loosening pressure

h_0 :Converted height of loosening soil($= \sigma_v/\gamma$)

K_0 :The ratio of horizontal earth pressure to vertical earth pressure (Usually,1.0 can be adopted as Ko)

ϕ : Internal friction angle of soils

p_0: Surcharge

γ : Unit weight of soil

c : Cohesion of soil

However, when p_0/γ is small compared with H, loosening pressure can be calculated using the following equation.

$$\sigma'_v = \frac{B_1(\gamma - c/B_1)}{K_o \tan\phi}\cdot\left(1 - e^{-K_0 \tan\phi \cdot H/B_1}\right)$$

Figure 4-5B – Loosening Pressure
(after JSCE, 2001)

Water Pressure – Groundwater level should be determined along with possible change of groundwater level during and after construction. Vertical water pressure should be a uniformly distributed load, and its magnitude should be hydrostatic pressure acting on the highest point at the tunnel crown, and hydrostatic pressure acting on the lowest point at the tunnel bottom. Horizontal water pressure should be uniformly distributed load, and its magnitude should be hydrostatic pressure.

Dead Weight – is a load in the vertical direction, distributed along the centroid of the lining. It should be calculated by the following equation:

$$g_1 = W_1/(2\pi \cdot R_c)$$

Surcharge – The effect of surcharge should be determined considering transmission of stress in the ground.

Soil Reaction – The extent of generation, shape of distribution, and the intensity of the soil reaction, should be determined in connection with the design calculation method being employed.

Construction Loads – Construction loads to be considered for the design of the lining should include 1) the thrust force of shield jacks; 2) pressure for backfill grouting; 3) operation load of the erector; 4) other loads, as appropriate.

Internal Loads – Internal load is a load which acts inside the lining after tunnel completion, and should be determined according to actual conditions.

Effects of Earthquake – When anticipated, studies should be made considering: importance of a tunnel; condition of tunnel location; condition of surrounding ground; earthquake motions experienced in the region concerned; structural details of the tunnel; and other necessary conditions.

Careful studies should be made in the following conditions:

- Where the lining structure changes suddenly, for example, at the underground tunnel connection, and at the connection with the shaft;
- When the tunnel is in soft ground
- Where ground conditions such as geology, overburden, and bedrock depth change suddenly
- When the alignment includes sharp curves
- When the tunnel is in loose, saturated sand and there is a possibility of liquefaction.

In general, aseismic studies of the shield tunnel are made considering the following:

1. Stability of the tunnel and surrounding ground; adequate studies on liquefaction of the surrounding soil should be conducted, and precautionary measures such as ground improvement, should be taken, if deemed necessary. Figure 4.5C presents a flow chart for studying stability of surrounding

ground in aseismic design.

2. Dynamic study of the tunnel in the transverse direction; should be done using the Response-displacement method – gives the member forces and deformation of the tunnel by calculating the displacement of the ground at the tunnel position and applying the entire or one part of its displacement to the tunnel. Figure 4-5D shows an example in which the surface subsoil is assumed subject to shear vibration and the displacement amplitude of its first vibration mode is obtained.

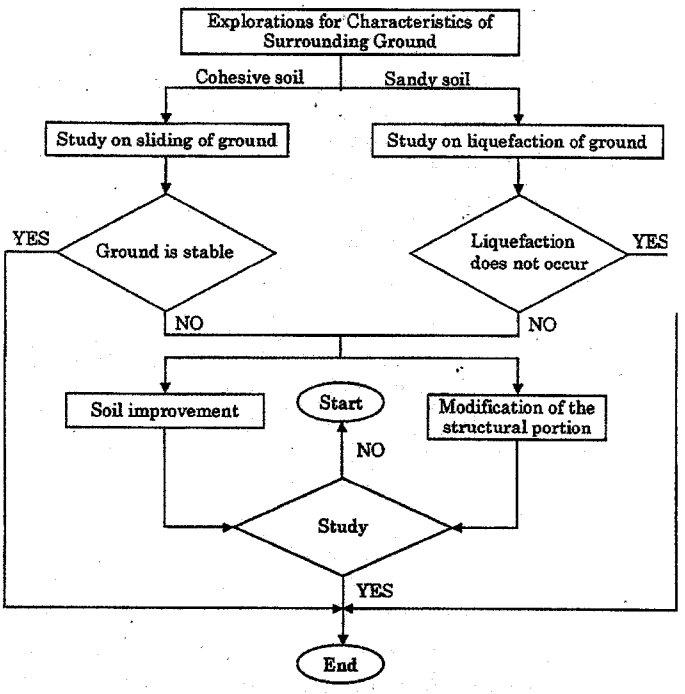

Figure 4-5C – Study on Stability of Surrounding Ground in aseismic design (after JSCE, 2001)

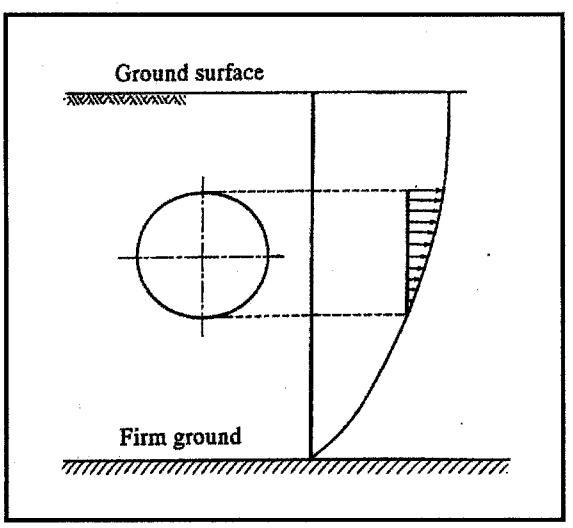

Fig. 4-5D – Transverse relative displacement in the Response-Displacement Method (after JSCE, 2001)

3. Dynamic study of the tunnel in the longitudinal direction – The wave length is determined from consideration of ground characteristics at the tunnel position, the displacement amplitude of the ground vibration, which is assumed to be on a sin wave, is then calculated by the response-displacement method. Member forces and the deformation of the tunnel in the longitudinal direction are then calculated by applying the obtained ground displacement to the tunnel. A flow chart and an example for aseismic study by the response-displacement method are shown in Figures 4-5E and 4-5F, respectively.

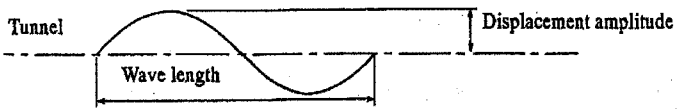

Fig. 4-5F – Longitudinal Ground Movements in the Response-Displacement Method (after JSCE, 2001)

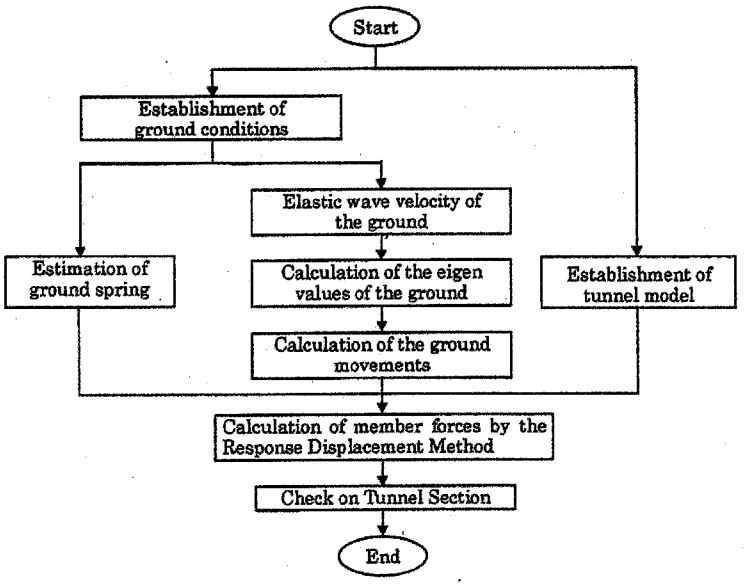

Figure 4-5E -- Flow Chart for the Response-Displacement Method (after JSCE, 2001)

Effects of Two or more Tunnels – When constructing a tunnel parallel to an existing one, the tunnel designer should consider the following:

1) *Condition of surrounding ground* – the degree to which the loosening of the ground will affect the load should be evaluated when a closed-face machine is used in soft ground with high sensitivity or sandy ground with low stability, in particular;
2) *The position of the tunnels in relation to one another* – will have an effect when clearance between tunnels is less than the outer diameter of the existing tunnel, either in the horizontal or vertical direction. When a succeeding tunnel is constructed below an existing one, there will be an increase in vertical load, caused by ground loosening and unequal settlement.
3) *The outer diameter of each tunnel*; When constructing two or more tunnels, design of the preceding tunnel should consider the effect of the outer diameter of both tunnels, along with the position of the preceding tunnel in relation to the succeeding shield tunnel;
4) *Timing of construction* of the new shield tunnel – when constructing a succeeding tunnel while the effects of the preceding tunnel are still being felt, careful consideration should be given to the timing of construction of both tunnels since the interaction of both tunnels, as described under *1)*, is significant;
5) *The type of shield machine* to be used at the time of construction – for a closed-face shield machine, the succeeding shield tunnel tends to push the preceding shield tunnel, contrary to when an open-face type shield machine is used, when the succeeding shield tunnel tends to pull the preceding shield tunnel;
6) *Construction loads* of the new shield tunnel that affect the existing tunnel – thrust load, grouting pressure, slurry pressure and mud slurry pressure.

Effects of Vicinity Construction – The Design Engineer should evaluate any untoward effects resulting from anticipated construction in close proximity during or after shield tunneling.

Effects of Ground Settlement – The Tunnel Designer should study the effects of soil characteristics on ground settlement; as well as the effect of ground settlement on the tunnel and the joints between the tunnel and the shaft.

1. *Effect of Ground Settlement on the Tunnel* can be studied in two ways; by studying:
   i. The effect of consolidation settlement on the tunnel in the transverse direction, and;
   ii. The effect of unequal settlement on the tunnel in the longitudinal direction.
2. *Joints between the Tunnel and shafts* – Relative displacement tends to occur at the joints connecting a tunnel and the shaft because different types of structures are connected at these positions. The design should prevent stress concentrations by applying flexible joints, where necessary, or reducing the effect of unequal settlement by making the shaft foundation a floating foundation. It is also effective to set the inner diameter larger, so that the required cross section can be secured by minor repair work.

Other Loads – A prior examination should be made of the effects of other possible loads likely to apply to tunnel lining.

Structural Calculation of Segment –

1) *Basis of structural calculation* should be as follows:
   i. Structural calculation for tunnel should be made under loads in each stage during construction and also after construction.
   ii. The design load for the cross section of tunnel should be determined assuming the worst possible condition in the tunnel section which is subject to design;
   iii. When calculating statically indeterminate force or elastic deformation for concrete segments, such calculation should be made ignoring reinforcement and assuming that the whole cross section of concrete is effective.

   The design of segments should be made with consideration given to loads that may work on the tunnel to be constructed for many years after completion as well as consideration of the following:
   - Stability, member forces and deformation during the period from immediately after the erection of segments to the hardening of backfill material;
   - Member forces of segments and their deformation due to thrust force by shield jacks;
   - Member forces of segments and their deformation caused by grouting pressure;
   - Sharp curve construction;
   - The case of rapid change in the ground;
   - The joints of the tunnels and shafts;
   - Effect of load fluctuation, vicinity construction, and future construction.
2) *Calculation of Member Forces* – member forces of segment should be calculated in consideration of properties of a structure. Since a suitable model to calculate member forces depends on given

conditions, such as tunnel usage, ground conditions, design loads, structures of segments, and required accuracy of analyses, careful consideration should be given to selecting a model.

Schematic drawings of some structural models of segmental ring are shown in Figure 4-5G1, and design load distributions proposed for these models are shown in Figure 4-5G2

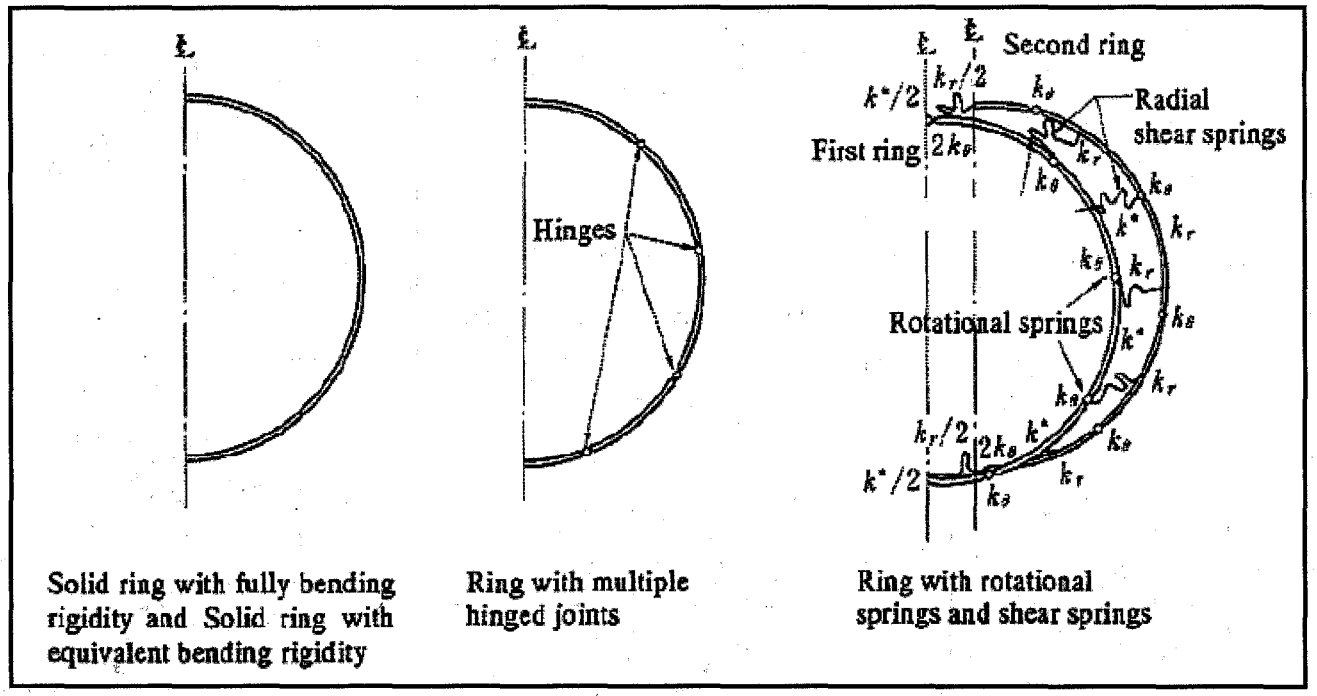

Figure 4-5G1 – Schematic Drawings of Design Models
(after JSCE, 2001)

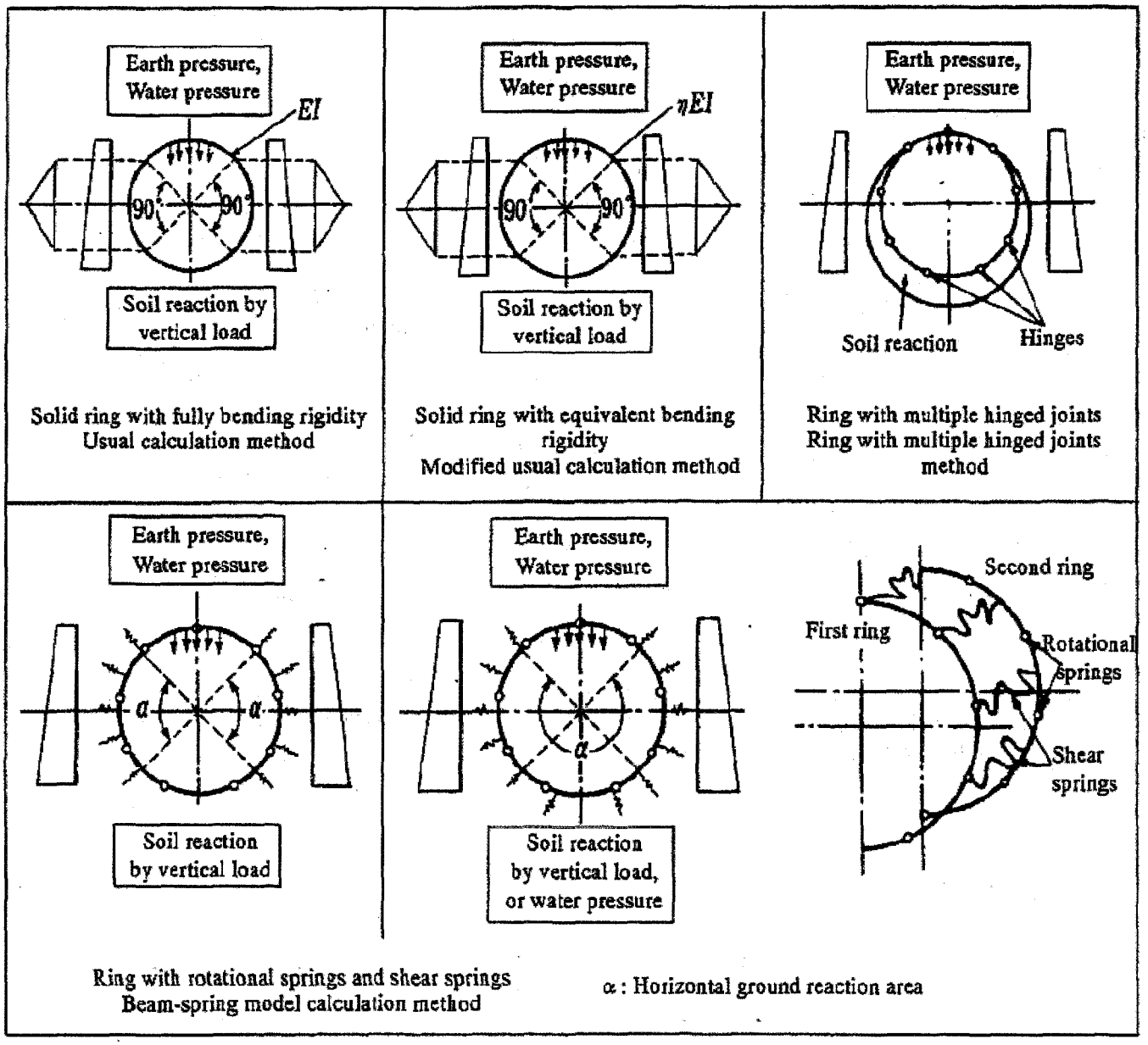

Figure 4-5G2 – Design Load Distributions for above Models (after JSCE, 2001)

Equations of major sectional forces are in Table 4.2

Load	Bending moment	Axial force	Shear force
Vertical load $(p_{e1}+p_{w1})$	$M=\frac{1}{4}(1-2\sin^2\theta)(p_{e1}+p_{w1})R_c^2$	$N=(p_{e1}+p_{w1})R_c\cdot\sin^2\theta$	$Q=-(p_{e1}+p_{w1})R_c\cdot\sin\theta\cdot\cos\theta$
Horizontal load $(q_{e1}+q_{w1})$	$M=\frac{1}{4}(1-2\cos^2\theta)(q_{e1}+q_{w1})R_c^2$	$N=(q_{e1}+q_{w1})R_c\cdot\cos^2\theta$	$Q=(q_{e1}+q_{w1})R_c\cdot\sin\theta\cdot\cos\theta$
Horizontal triangular load $(q_{e2}+q_{w2}-q_{e1}-q_{w1})$	$M=\frac{1}{48}(6-3\cos\theta-12\cos^2\theta+4\cos^3\theta)(q_{e2}+q_{w2}-q_{e1}-q_{w2})R_c^2$	$N=\frac{1}{16}(\cos\theta+8\cos^2\theta-4\cos^3\theta)(q_{e2}+q_{w2}-q_{e1}-q_{w1})R_c$	$Q=\frac{1}{16}(\sin\theta+8\sin\theta\cdot\cos\theta-4\sin\theta\cdot\cos^2\theta)(q_{e2}+q_{w2}-q_{e1}-q_{w1})R_c$
Soil reaction $(q_r=k\cdot\delta)$	$0\le\theta<\frac{\pi}{4}$ $M=(0.2346-0.3536\cos\theta)k\cdot\delta\cdot R_c^2$ $\frac{\pi}{4}\le\theta\le\frac{\pi}{2}$ $M=(-0.3487+0.5\sin^2\theta+0.2357\cos^3\theta)k\cdot\delta\cdot R_c^2$	$0\le\theta<\frac{\pi}{4}$ $N=0.3536\cos\theta\cdot k\cdot\delta\cdot R_c$ $\frac{\pi}{4}\le\theta\le\frac{\pi}{2}$ $N=(-0.7071\cos\theta+\cos^2\theta+0.707\sin^2\theta\cdot\cos\theta)k\cdot\delta\cdot R_c$	$0\le\theta<\frac{\pi}{4}$ $Q=0.3536\sin\theta\cdot k\cdot\delta\cdot R_c$ $\frac{\pi}{4}\le\theta\le\frac{\pi}{2}$ $Q=(\sin\theta\cdot\cos\theta-0.7071\cos^2\theta\sin\theta)k\cdot\delta\cdot R_c$
Dead load $(P_{g1}=\pi\cdot g_1)$	$0\le\theta\le\frac{\pi}{2}$ $M=\left(\frac{3}{8}\pi-\theta\cdot\sin\theta-\frac{5}{6}\cos\theta\right)g\cdot R_c^2$ $\frac{\pi}{2}\le\theta\le\pi$ $M=\left\{-\frac{1}{8}\pi+(\pi-\theta)\sin\theta-\frac{5}{6}\cos\theta-\frac{1}{2}\pi\cdot\sin^2\theta\right\}g\cdot R_c^2$	$0\le\theta\le\frac{\pi}{2}$ $N=\left(\theta\cdot\sin\theta-\frac{1}{6}\cos\theta\right)g\cdot R_c$ $\frac{\pi}{2}\le\theta\le\pi$ $N=\left(-\pi\cdot\sin\theta+\theta\cdot\sin\theta+\pi\cdot\sin^2\theta-\frac{1}{6}\cos\theta\right)g\cdot R_c$	$0\le\theta\le\frac{\pi}{2}$ $Q=\left(\theta\cdot\cos\theta+\frac{1}{6}\sin\theta\right)g\cdot R_c$ $\frac{\pi}{2}\le\theta\le\pi$ $Q=\left\{(\pi-\theta)\cos\theta-\pi\cdot\sin\theta\cdot\cos\theta-\frac{1}{6}\sin\theta\right\}g\cdot R_c$
Horizontal deformation of a ring at spring line (δ)	Without considering soil reaction derived from dead weight of lining: $\delta=\frac{\{2(p_{e1}+p_{w1})-(q_{e1}+q_{w1})-(q_{e2}+q_{w2})\}R_c^4}{24(\eta\cdot EI+0.0454k\cdot R_c^4)}$ Considering soil reaction derived from dead weight of lining: $\delta=\frac{\{2(p_{e1}+p_{w1})-(q_{e1}+q_{w1})-(q_{e2}+q_{w2})+\pi g\}R_c^4}{24(\eta\cdot EI+0.0454k\cdot R_c^4)}$ However EI: Bending rigidity in unit width		

Table 4-2 – Equations of Member Forces for 'Usual Calculation & Modified Usual' Calculation Methods
(*after JSCE, 2001*)

3) *Effective Width of Skin Plate and Backboard* – the effective width of skin plate and backboard should be based to suit the segment structure.
4) *Stress of Main Section* – the stress on the main section of the segment should be calculated using the maximum member force, assuming the beam element is straight.
5) *Calculation of Segment Joint* – The segment joint should be designed in accordance with the method used in calculating member forces of the segmental ring.
6) *Calculation of Skin Plate / Backboard* – With the Box-type Segment, the skin plate is that to which the periphery is supported with the main girders

and the splice plates. For the Steel Segment, the term "Skin Plate" is used; for the Ribbed-type RC Segments, the term " Backboard" is used (Figures C & D). The skin plate / backboard should be designed as a structural member with uniform loading conditions. Due consideration should be given for material and structural characteristics of segments.

7) *Calculation of Vertical Rib* – The vertical rib should be designed against the thrust force of shield jacks as a short column with an eccentric axial force acting only towards the direction of the tunnel radius.

Design Detail for Segment --

1. *Joint Structure* – Joint structure of segments should be designed in consideration of strength, reliability of assembly, workability and watertightness.
2. *Bolt Layout* – Bolt layout should be designed in consideration of strength and rigidity of segmental ring, accuracy of manufacturing, erection of segment, and watertightness.
3. *Vertical Rib* – Vertical ribs should be designed for box type segment in order to transmit thrust force of shield jacks to adjacent segmental ring.
4. *Waterproofing* – As a general rule, sealing groove and caulking groove should be provided on the joint surface in order to prevent water leakage.
5. *Grouting Hole* – Grouting holes of segment should be provided for uniform backfill grouting, as necessary.
6. *Segment Hanger* – Segment hanger should be provided for each segment piece.
7. *Workability, Arrangement, and Fixing of Reinforcement* –
   i) Steel bar bending arrangement should be determined in consideration of reinforcement performance, bending, filling of concrete and placement of reinforcement.
   ii) The horizontal spacing between main reinforcements should be wider than the larger of : 5/4 of the maximum size of coarse aggregates or the diameter of the reinforcement. The vertical clearance between main reinforcement, if arranged in two layers or more, should be wider than the larger of: 0.8 in (20mm) or the diameter of the reinforcement.
   iii) In principle, reinforcement joints are not permitted for segments. In case joints are necessary, joints should be designed in accordance with specifications and diameter of reinforcement, proper type of joint and filling clearances between reinforcement with concrete. Main reinforcements, stirrups, distribution bars, erection bars and anchor bars are required for segment construction. Ensuring sufficient clearance is difficult, therefore, no steel bar joint should be provided in the segment.
   iv) End of reinforcement should be fixed in concrete with sufficient bonding, hooks or mechanical joint.
   v) Concrete covers should be determined in consideration of concrete quality, diameter of reinforcement, accuracy of production of segment or the environment of tunnel
8. *Corrosion Protection and Rust Protection* – Corrosion protection and rust protection measures should be provided for the segment, as necessary.
9. *Other Design Detail* –
   - Welding – should be carried out accurately in accordance with the approved working method and procedure to achieve the specified quality.
   - Air Hole – for removal of air during concrete placement of the secondary lining, should be provided on steel and ductile cast-iron segments;
   - Reinforcement Plate – For steel segments, reinforcement plate should be provided to reinforce the splice plate and to increase rigidity of joint/assembly system, if necessary.

   Secondary lining should be provided where steel segments and ductile cast iron segments are used as primary lining for shield tunnels. It is difficult to fill concrete in boxes surrounded with main girders and vertical ribs due to air voids when installing the secondary lining. Air holes should be provided to remove air at a corner of vertical ribs, as shown in the Figure.

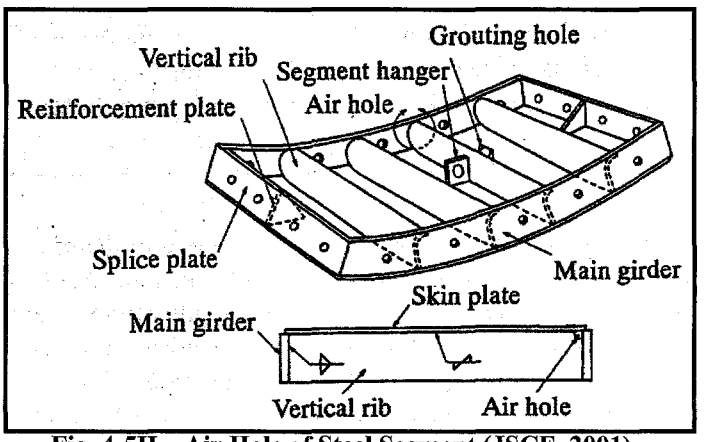

Fig. 4-5H – Air Hole of Steel Segment (JSCE, 2001)

h) Tunnel Jacking

i. Introduction

Tunnel jacking is used to construct large shallow underground openings beneath facilities that must be kept in service during construction. The method, which evolved from pipe jacking, is generally used in soft ground for relatively short lengths of tunnel, where TBM or cut-and-cover methods would be less desirable.

The technique of tunnel jacking is not new, but in recent years it has been used to construct openings primarily in Europe and Asia, often under railroad lines and highways.

Until recently, when it was used on the Central Artery / Tunnel project (CA/T) in Boston, the method has had limited use in the United States. However, its use on the CA/T project was the largest application of its kind in the world, resulting in several awards and accolades.

Ropkins (1999) and Taylor & Winsor (1999) are excellent references on design and construction of jacked tunnels.

ii. Technique Selection

Selection of the Technique should consider the following:

- ✓ Required tunnel clearance envelope
- ✓ Requirement for services within the completed tunnel
- ✓ Driver sight lines
- ✓ Acceptable amount of disturbance to the overlying facility
- ✓ Ability to re-level or adjust the overlying facility periodically during construction
- ✓ Optimum depth from ground surface to the top of the tunnel
- ✓ Ground conditions both for stability at the tunnel face and for provision of the required jacking force to install the tunnels
- ✓ Maintenance provisions to the completed tunnel
- ✓ Details of any abutting structures or tunnels
- ✓ Architectural/aesthetic requirements
- ✓ Health and safety of construction staff.

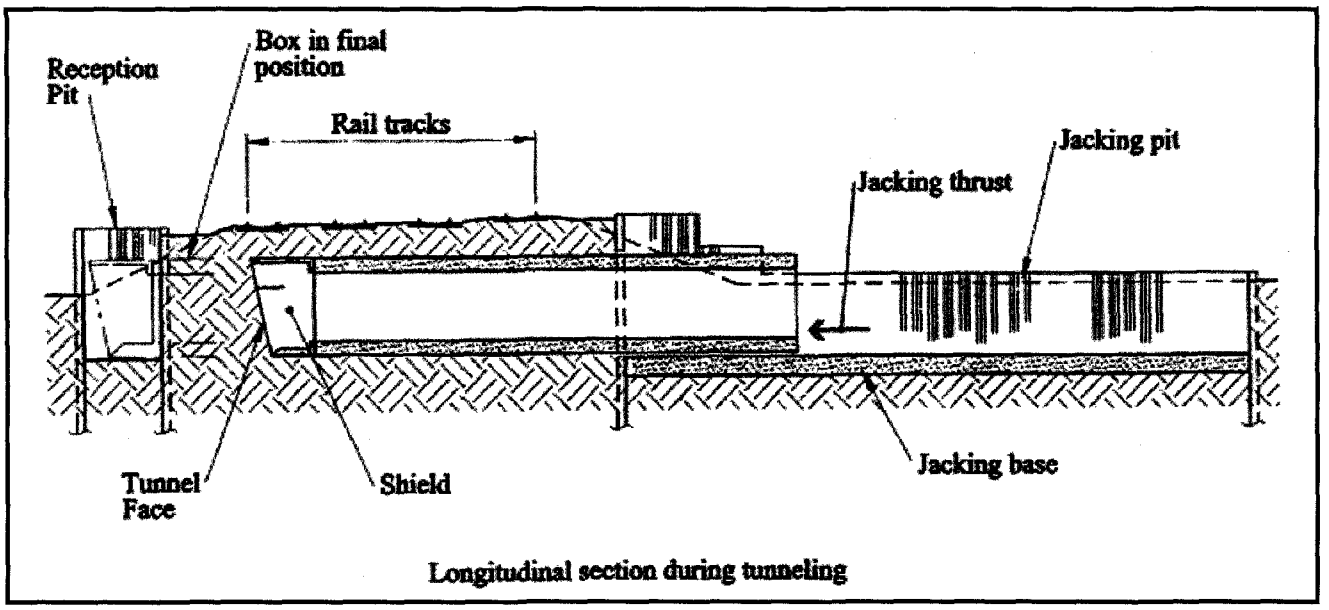

Figure 4-5I – Basic Jacking Sequence (After Ropkins, 1999)

iii. Basic Jacking Sequence

Figure 4-5I illustrates the basic jacking sequence of jacked box tunneling, using a single piece site-cast box. The box structure is constructed on a jacking base in a jacking pit located to one side of an existing railway. A tunneling shield is provided at the front end of the box and hydraulic jacks are provided at the rear. The box is tunneled into position under the railway tracks by excavating ground from within the shield and jacking the box forward.

In order to maintain support to the tunnel face, excavation and jacking are normally carried out alternately in small increments of advance.

iv. Design

Ground Drag --

Design should include provisions for controlling down drag. An excellent solution for the longer boxes is the Anti-drag System (ADS), discussed by Ropkins (1999), which effectively separates the external surface of the box from the adjacent ground during tunneling.

The ADS is an array of closely-spaced wire ropes which are initially stored within the box with one end of each rope anchored at the jacking pit. As the box advances, the ropes are progressively drawn out through guide holes in the shield and form a stationary separation layer between the moving box and the adjacent ground. The drag forces are absorbed by the ADS and transferred back to the jacking pit. In this manner the ground is isolated from drag forces and remains largely undisturbed.

Vertical Alignment

Design should also include provisions for controlling vertical alignment. A long box has directional stability by virtue of its large length to depth ratio. The box is guided during the early stages of installation by its self weight acting on the jacking base. Beyond the jacking base, the bottom ADS 'tracks' maintain the box on a correct vertical alignment. As the pressure on the ground under the 'tracks' is normally less than or similar to the pre-existing pressure in the ground and as localized disturbance of the ground is eliminated, no settlement of the tracks can occur. Any tendency for the box to dive is thereby prevented.

In the case of a short box or series of short boxes, it is necessary to steer each box by varying the elevation of the jacking thrust. This is done by arranging groups of jacks at each jacking station at different elevations within the height of the box and by selectively isolating individual groups. The jacking process is complicated by the need to check, at each stage of the operation, the alignment of all box units and if necessary to employ a suitable steering response at all jacking stations.

Horizontal Alignment

Design should also include provisions for controlling horizontal alignment. As discussed previously under vertical alignment, a long box has a degree of directional stability by virtue of its length to width ratio, and is normally guided during the early stages of installation by fixed guides located on the jacking base along both sides of the box. Where appropriate, steerage may also be used and is normally provided by selectively isolating one or more groups of thrust jacks located across the rear of the box.

In the case of a short box or series of short boxes, fixed side guides are also appropriate but more reliance has to be placed on steerage.

Face Loss

Design should also include provisions for controlling face loss which occurs when the ground ahead of the shield moves towards the tunnel as a result of reduction in lateral pressure in the ground at the tunnel face. With face loss, as the tunnel advances, a greater volume of ground is excavated than that represented by the theoretical volume displaced by the tunnel advance.

In cohesive ground, face loss is controlled by supporting the face at all times by means of a specifically-designed tunneling shield and by careful control of both face excavation and box advance. The shield is normally divided into cells by internal walls and shelves which are pushed firmly into the face. Typically 0.5 ft (150mm) of soil is trimmed from the face following which the box is jacked forward 0.5 ft (150mm). This sequence is repeated until the tunneling operation is complete, thus maintaining the necessary support to the face.

The ground may need to be stabilized in advance of the tunneling operation, where the ground is weak or where there is high water table or artesian pressure. Techniques for stabilizing ground include: grouting, well point dewatering, and freezing.

The Tunnel Designer should ensure that ground treatment measures do not in themselves cause an unacceptable degree of ground disturbance and surface movement.

Overcut

Design should also include provisions for controlling overcut in soft ground, by ensuring that the shield perimeter is kept buried and cuts the ground to the required profile. However, a degree of over-cut at the roof and sides beyond the nominal dimensions of the box is required for two reasons:

1. The hole through which the box travels must be large enough to accommodate irregularities in the external surfaces of the box;
2. It is desirable to reduce contact pressures between the ground and the box, to reduce drag.

The amount of over-cut required should be minimized if unnecessary ground disturbance and surface settlement is to be avoided. This demands that the external surfaces of the box be formed as accurately as possible. Typical forming tolerances are: ± 0.4 in (10mm) at the bottom and ± 0.6 in (15mm) at the walls and roof.

Tunneling Operation

The jacked box tunneling operation must be carefully monitored and controlled to ensure proper performance and safety. Throughout the tunneling operation, movements at the ground surface over the area affected by the tunneling operation, jacking forces and box alignments are all regularly monitored and compared to predicted or specified values.

The jacking operation can be adjusted based on the monitoring data.

Box Jacking & ADS Loads

Interface Drag Loads -- Soil/box contact pressures are calculated and multiplied by appropriate friction factors, and are used to estimate drag loads at frictional interfaces; an appropriate adhesion value is used at the interface between the box and cohesive ground.

Jacking Load -- The ultimate bearing pressures on the face supports and on the shield perimeter are used to calculate the jacking load required to advance the shield.

ADS Loads – Simplifying assumptions are made in developing ADS loads and modeling box/ADS/soil interaction, the validity of which is done by back-analyses of loads and other historical data.

Jacking Thrust

Jacking thrust is provided by means of specially built high capacity hydraulic jacking equipment. Jacks of 500 tons (4,448 kN) or more can be utilized on large tunnels. Sufficient capacity is provided, via multiple jacks, to allow for steerage control and for possible inaccuracies in the assessment of jacking loads.

Reaction to the jacking thrust developed is provided by either a jacking base or a thrust wall, depending on the site topography and the relative elevation of the tunnel. These temporary structures must in turn transmit the thrust into a stable mass of adjacent ground.

A jacking base is normally stabilized by shear interaction with the ground below and on each side. Where the interface is frictional, the interaction may be enhanced by surcharging the jacking base by means of pre-stressed ground anchors or compacted tunnel spoil. The jacking base is also stabilized by both the top and bottom ADS which are anchored to it.

A thrust wall is normally stabilized by passive ground pressure. In developing this reaction, the wall may move into the soil and this movement must be taken into account when designing the jacking system. When a thrust wall is used in a vertical sided jacking pit, care is required to ensure that movement of the thrust wall under load does not cause any lack of stability elsewhere in the pit.

4.5. Rock Tunnels

a) *General*

Uncertainties persist in the properties of rock materials and in the way rock materials and groundwater behave; these uncertainties must be overcome by employing sound flexible design and redundancies, including selection or anticipation of construction methods. Design must be a careful and deliberate process that incorporates knowledge from many disciplines; few engineers know enough about design, construction, operations, environmental concerns, and commercial contracting practices, to make all important decisions alone.

b) *Rock Discontinuities*

Two major types should be considered:

- Fractures, which result from cooling of magma, tectonic action, formation of synclines and anticlines, or other geologic stresses;
- Bedding Planes are relatively thin layers of weaker material that create a definite discontinuity, interspersed between layers of more competent sedimentary material.

Faults are any fracture showing relative displacement, and are the result of seismic activity at great depth. The Tunnel Engineer should consider individually, those faults showing major displacement activity, and provide necessary stabilization on each side of the fault. In particular, movements may have juxtaposed a dry and tight formation against a heavily water-bearing formation, with resulting inflow that may destroy the heading, if not anticipated.

Joints are fractures along which there is no evident displacement. The tunnel Engineer should consider continuous and discontinuous joints; joint shape (particularly planar joints); joint roughness (smooth, interlocked, or slickensides); joint alteration; and bedding planes.

c) *Rock Movement* – The Tunnel Engineer, in designing the principal structural element (the rock arch or rock shell) should, in most cases, assume that elastic movements are insignificant; design should consist of evaluating the erratic movements of joints and blocks and how they can be controlled.

Two types of movement should be considered

- Frictional, with high resistance, where friction is supplied by the shape and surface of the joint, and the amount of jointing;
- Sliding, where intrusive material separates rock fragments, or the rock itself has been altered to lower resistance (as in healed [no joint], unaltered [clean/sharp], and altered [non-softening coatings to softening degradations]).

In evaluating the rock mass, the Tunnel Engineer should also consider: the presence of water; in-situ conditions; and special zones of weakness. Free water in discontinuities acts as a lubricant and is a significant tunneling deterrent.

c) *Rock Reinforcement*

Two types of reinforcement should be considered:

- Rock Bolts (including rock dowels and cable tendons); bolts are pretensioned, and dowels are initially unstressed. Bolts should be used in special situations, such as very narrow pillars where the additional confinement provided by the pretension force is considered necessary. Use of tendons should be limited to long distances between anchorage and excavated surface; for example, an insufficient thickness of sound rock overlain by a substantial thickness of incompetent rock can be supported by anchoring it to a second, overlying layer of competent rock. Both permanent bolts and economical alternatives (friction bolts) should be considered.
- Shotcrete; functions as rock reinforcement by forcing its way into spaces between intact rock pieces when applied to rock at high pressures; it prevents raveling, thereby eliminating the nil confining pressure at the surface and constraining movement within the mass. Its rapid strength gain permits it to function quickly as a membrane, thereafter gaining strength as the newly confined rock struggles to obtain a new equilibrium condition.

d) *Design of Initial Support*

Initial ground support is installed shortly after excavation, to make the underground opening safe until permanent support is installed. Initial ground support may also function as the / a part of the permanent ground support system. The initial ground support system must be selected in view of its temporary and permanent functions.

The Tunnel Engineer should use one of the following methodologies to select initial ground support:

1. EMPIRICAL RULES constructed from experience records of past satisfactory performance. If this these empirical systems are used, it will be necessary to examine the available rock mass information to determine if there are any applicable failure modes not addressed by the empirical systems. Empirical systems include the following:

   Terzaghi's Rock Loads & RQD [1964] -- In general, Terzaghi's rock loads should not be used with methods of excavation and support that minimize rock mass disturbance and loosening, such as excavation on TBM and immediate ground support using shotcrete and dowels.

   Wickman et al.'s RSR [1972] – The RSR database consists of 190 tunnel cross sections, of which only three were shotcrete-supported, and fourteen were rock bolt-supported. Therefore, the RSR should be used in rock load recommendations for steel ribs.

   Bieniawski's Geomechanics Classification RMR [1979] – The RMR system is based on a set of case histories of relatively large tunnels excavated using blasting. Ground support components include rock bolts (dowels), shotcrete, wire mesh, and for the two poorest classes, steel ribs. The system should be used for such conditions; it should not be used for TBM-driven tunnels, where rock damage is less, and where immediate shotcrete application may not be feasible.

   Barton et al.'s Q-System [1974] – this system is derived from a database of underground openings excavated by blasting and supported by rock bolts (tensioned and untensioned), shotcrete, wire and chain link mesh, and cast-in-place concrete arches. Increase the Q-value by a factor of 5.0 for TBM-driven tunnels.

2. THEORETICAL & SEMI-THEORETICAL METHODS –

   Rock Bolt Analyses – When directions of discontinuities are known, wedge analyses should be used for rock bolt analysis, whereby the stability of a wedge is analyzed using two- or three-dimensional equilibrium equations. Wedge analysis (see example in Figure 4-6) will show which wedges are potentially unstable, and will indicate the appropriate orientation of bolts or dowels for their support. Table 4-3 summarizes empirical rules for rock bolt design (after Lang, 1961).

   Shotcrete Analyses –Shotcrete is used to create a semi-stiff immediate lining on the excavated rock surface. By its capacity to accept shear and bending and its bond to the rock surface, shotcrete prevents displacement of blocks of rock that can potentially fall; it can also act as a shell and accept radial loads. It is possible to analyze all of these modes of failure only if the loads and boundary conditions are known.

   It should be noted that neither the "Falling Block Theory" (whereby the weight of a wedge of rock is assumed to load the skin of shotcrete, which can then fail by shear, diagonal tension, bonding loss, or bending [Figure 4-7]) nor the "Arch Theory" (where an external load is assumed, and the shotcrete shell is analyzed as an arch, with bending and compression), provides anything but a crude approximation of stresses in the shotcrete.

   When shotcrete is used in NATM, computer analyses can be used to reproduce the construction sequence, including the effects of variations of shotcrete modulus and strength with time. Thus, one can estimate load build-up in the shotcrete lining as the ground yields to additional excavation and as more layers of shotcrete are applied.

3. FUNDAMENTAL APPROACH – DESIGN OF STEEL RIBS & LATTICE GIRDERS –

   Use of Steel Ribs & Lattice Girders -- Use steel sets as ground support near tunnel portals and at intersections, for TBM starter tunnels, in poor ground in blasted tunnels, and in TBM tunnels in poor ground when a reaction platform for propulsion is required. Traditional blocking consists of timber blocks and wedges, tightly installed between the sets and the rock, with an attempt to prestress the set. Recently, concrete or steel blocking is often specified. Shotcrete is also used, and when well placed, it fills the space between the steel rib and the rock, and is superior to other methods of blocking by providing for uniform interaction between the ground and support.

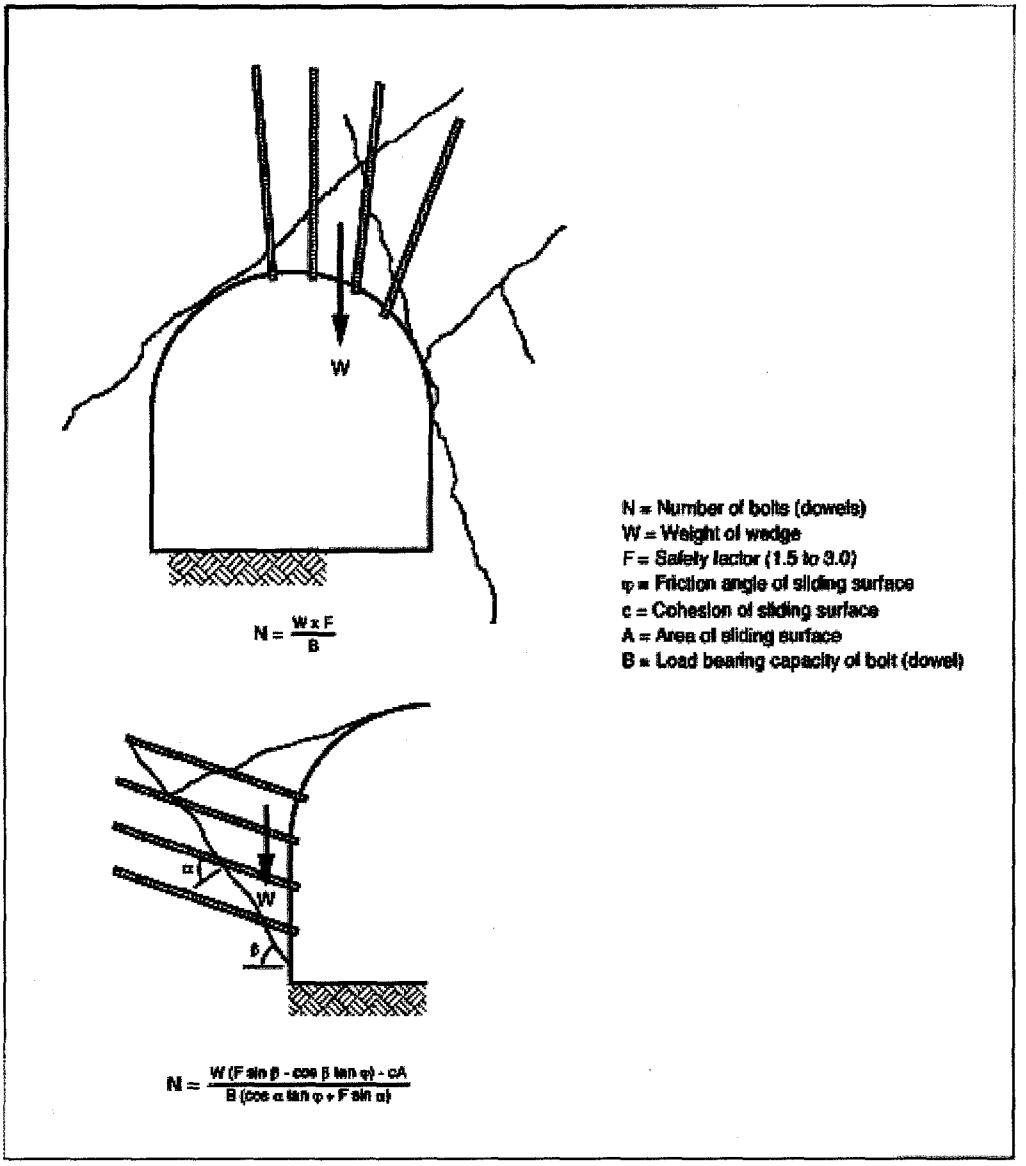

Figure 4-6 – Gravity Wedge Analyses to Determine Anchor Loads & Orientations

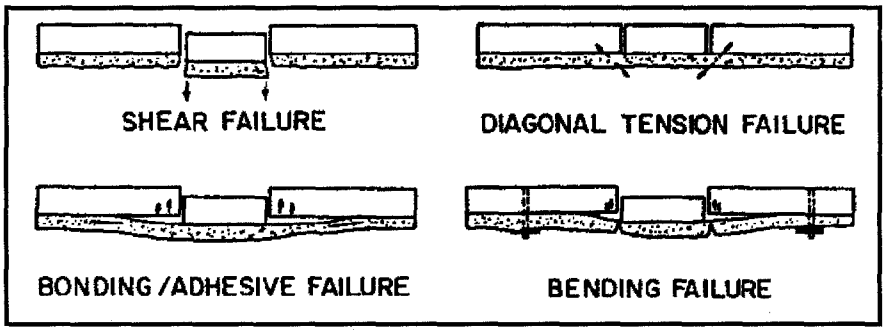

Figure 4-7 – Shotcrete Failure Modes

Table 4-3 – Empirical Design Recommendations (After Lang, 1961)

Parameter	*Empirical Rule*
Minimum length and maximum spacing	
Minimum length	Greatest of
(a)	2 x bolt spacing
(b)	3 x thickness of critical and potentially unstable rock blocks (Note 1)
(c)	For elements above the springline: spans <6 m: 0.5 x span spans between 18 and 30 m: 0.25 x span
(d)	For elements below the springline: height <18 m: as (c) above height >18 m: 0.2 x height
Maximum spacing	Least of:
(a)	0.5 x bolt length
(b)	1.5 x width of critical and potentially unstable rock blocks (Note 1)
(c)	2.0 m (Note 2)
Minimum spacing	0.9 to 1.2 m
Minimum average confining pressure	
Minimum average confining pressure at yield point of elements (Note 3)	Greatest of
	(a) Above springline: *either* pressure = vertical rock load of 0.2 x opening width or 40 kN/m^2
(b)	Below springline: *either* pressure = vertical rock load of 0.1 x opening height of 40 kNm^2
(c)	At intersections: 2 x confining pressure determined above (Note 4)

Notes:
1. Where joint spacing is close and span relatively large, the superposition of two reinforcement patterns may be appropriate (e.g., long heavy elements on wide centers to support the span, and shorter, lighter bolts on closer centers to stabilize the surface against raveling).
2. Greater spacing than 2.0 m makes attachment of surface support elements (e.g., weldmesh or chain-link mesh) difficult.
3. Assuming the elements behave in a ductile manner.
4. This reinforcement should be installed from the first opening excavated prior to forming the intersection. Stress concentrations are generally higher at intersections, and rock blocks are free to move toward both openings.

<u>Conversion Factors</u>:
1m = 3.28 ft
1 kN/m^2 = 0.145038 psi = 1 kPa

Lattice girders offer similar moment capacity at a lower weight than comparable steel ribs. They are easier to handle and erect, and their open lattice permits shotcrete to be placed with little or no voids in the shadows behind the steel structure, thus forming a composite structure. They can be used together with dowels, spiling, and wire mesh, and as the final lining.

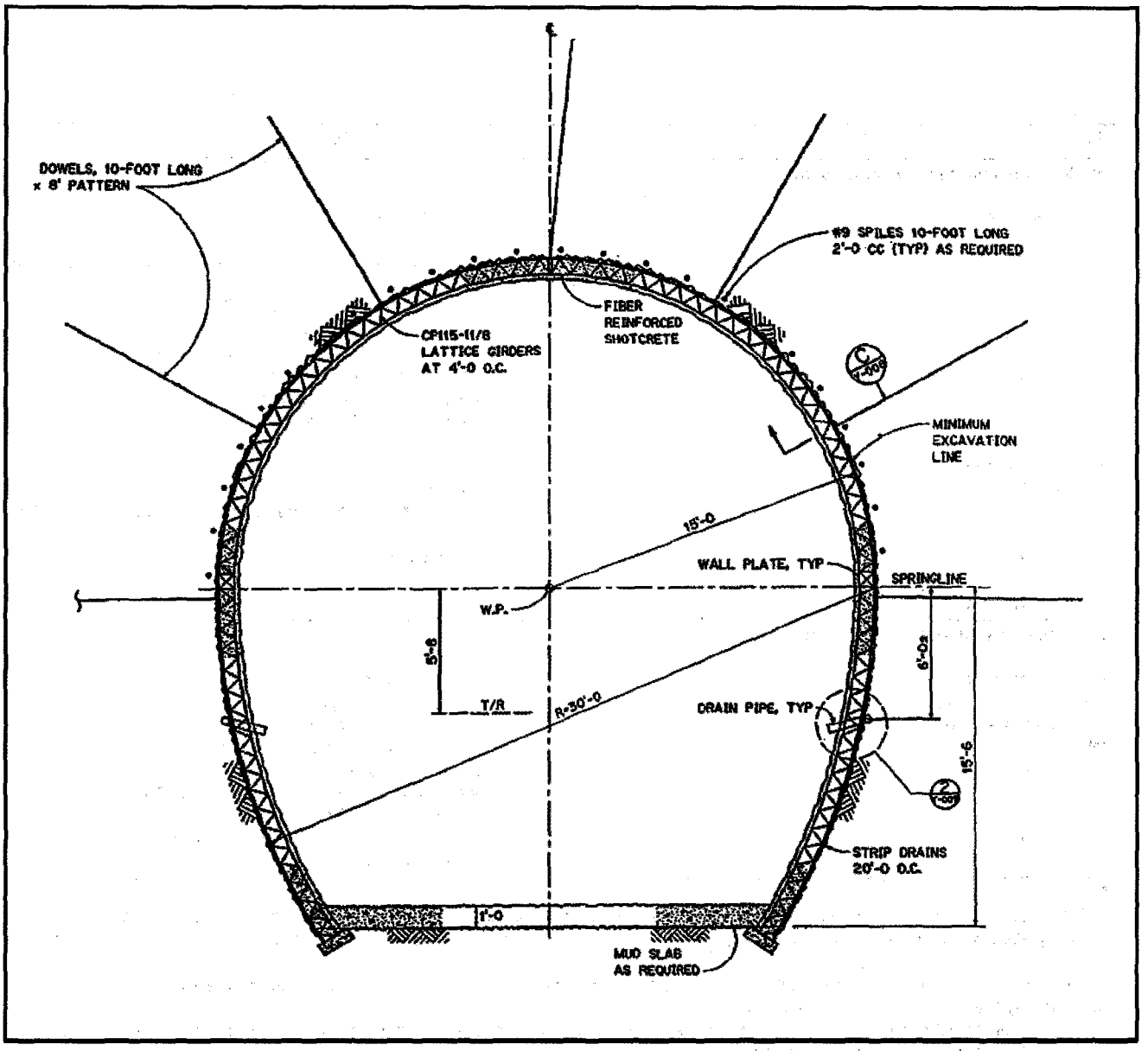

Note: 1 ft = 0.3048m

Figure 4-8 – Lattice Girders used as final support, with steel-reinforced shotcrete, dowels & spiles

Design of Blocked Ribs – The Tunnel Engineer is referred to Proctor & White (1946) for details of design (and design charts) of steel ribs installed with blocking, and to the available commercial literature for the design of connections and other details.

Lattice Girders with Continuous Blocking – The theory for blocked arches works adequately for curved structural elements if the blocking is able to deform in response to applied loads, provided the arch transmits a thrust and moment to the end points of the arch. With continuous blocking by shotcrete, however, the blocking does not yield significantly once it has set, and load distribution is a function of excavation and installation sequences. Moments in the composite structure should be estimated using one of the methods discussed in Section g) *Design of Permanent, Final Lining.*

Use finite element or finite difference methods to estimate moments for sequential excavation and support, where the ground support for a tunnel is constructed in stages. These analyses only yield approximate results, but are useful to study variations in construction sequences, locations of maximum moments and thrusts, and effects of variations of material properties and in-situ stress.

The analysis should incorporate at least the following features:

1. Unloading of the rock due to excavation
2. Application of ground support
   - -- First shotcrete application
   - -- Lattice girder installation
   - -- Subsequent shotcrete application
   - -- Other ground support (dowels, etc), as applicable
3. Increase in shotcrete modulus with time as it cures
4. Repeat for all partial face excavation sequences until lining closure is achieved.

Stresses in composite lattice girder and shotcrete linings can be analyzed in a manner similar to reinforced concrete subject to thrust and bending [see Section g) *Design of Permanent, Final Lining*]. Figure 4-9 shows an approximation of the typical application of lattice girders and shotcrete. The moment capacity analysis should be performed using the applicable shotcrete strength at the time considered in the analysis.

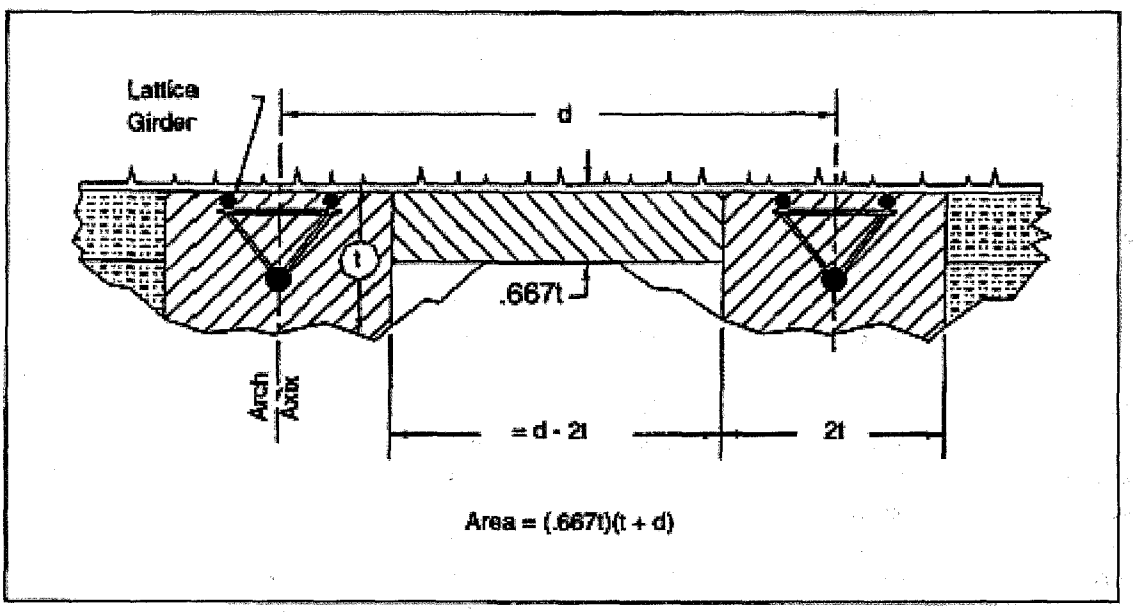

Figure 4-9 – Estimation of Cross Section for Shotcrete-encased lattice Girders

e) Geomechanical Analysis

Understanding rock mass response to tunnel and shaft construction is necessary for assessing opening stability and opening support requirements. Several approaches of varying complexity have been developed to help the designer understand rock mass response. The methods cannot consider all aspects of rock behavior, but are useful in quantifying rock response and providing guidance in support design.

General Concepts – A comprehensive treatment of stress and strain relationships and in-situ stress conditions for rock, is given in the US Army COE Manual EM 1110-2-2901 (1997) and in classic rock mechanics literature. Geotechnical parameters of some intact rocks are summarized in Table 4-4, and Table 4-5 presents approximate relationships between Rock Mass Quality and material constants applicable to underground works. Figure 4-10 is based on a survey of published data on in-situ stress measurements as compiled by Hoek and Brown (1980). It confirms that the vertical stresses measured in the field reasonably agree with simple predictions using the overlying weight of rock.

Table 4-4 – Geotechnical Parameters of Some Intact Rocks (After Lama & Vutukuri, 1978) [*see Appendix D for conversion factors*]

Rock Type	Location	Density Mg/m^3	Young's Modulus, GPa	Uniaxial Compressive Strength, MPa	Tensile Strength MPa
Amphibolite	California	2.94	92.4	278	22.8
Andesite	Nevada	2.37	37.0	103	7.2
Basalt	Michigan	2.70	41.0	120	14.6
Basalt	Colorado	2.62	32.4	58	3.2
Basalt	Nevada	2.83	33.9	148	18.1
Conglomerate	Utah	2.54	14.1	88	3.0
Diabase	New York	2.94	95.8	321	55.1
Diorite	Arizona	2.71	46.9	119	8.2
Dolomite	Illinois	2.58	51.0	90	3.0
Gabbro	New York	3.03	55.3	186	13.8
Gneiss	Idaho	2.79	53.6	162	6.9
Gneiss	New Jersey	2.71	55.2	223	15.5
Granite	Georgia	2.64	39.0	193	2.8
Granite	Maryland	2.65	25.4	251	20.7
Granite	Colorado	2.64	70.6	226	11.9
Graywacke	Alaska	2.77	68.4	221	5.5
Gypsum	Canada	-	-	22	2.4
Limestone	Germany	2.62	63.8	64	4.0
Limestone	Indiana	2.30	27.0	53	4.1
Marble	New York	2.72	54.0	127	11.7
Marble	Tennessee	2.70	48.3	106	6.5
Phyllite	Michigan	3.24	76.5	126	22.8
Quartzite	Minnesota	2.75	84.8	629	23.4
Quartzite	Utah	2.55	22.1	148	3.5
Salt	Canada	2.20	4.6	36	2.5
Sandstone	Alaska	2.89	10.5	39	5.2
Sandstone	Utah	2.20	21.4	107	11.0
Schist	Colorado	2.47	9.0	15	-
Schist	Alaska	2.89	39.3	130	5.5
Shale	Utah	2.81	58.2	216	17.2
Shale	Pennsylvania	2.72	31.2	101	1.4
Siltstone	Pennsylvania	2.76	30.6	113	2.8
Slate	Michigan	2.93	75.9	180	25.5
Tuff	Nevada	2.39	3.7	11	1.2
Tuff	Japan	1.91	76.0	36	4.3

Table 4-5 – Approximate Relationship between Rock Mass Quality and Material Constants Applicable to Underground Works

	Carbonate Rocks with Well Developed Crystal Cleavage *dolomite, limestone, and marble*	**Lithified Agrillaceous Rocks** *mudstone, siltstone, shale, and slate (normal to cleavage)*	**Arenaceous Rocks with Strong Crystals and Poorly Developed Crystal Cleavage** *sandstone and quartzite*	**Fine-Grained Polymineralic Igneous Crystalline Rocks** *andesite, dolerite, diabase, and rhyolite*	**Coarse-Grained Polymineralic Igneous and Metamorphic Crystalline Rocks** *amphibolite, gabbro, gneiss, granite, norite, quartz-diorite*
Intact Rock Samples *Laboratory specimens free from discontinuities* RMR = 100, Q = 100	m = 7.00 s = 1.00	10.00 1.00	15.00 1.00	17.00 1.00	25.00 1.00
Very Good Quality Rock Mass *Tightly interlocking undisturbed rock with unweatherd joints at 1 to 3 m* RMR = 85, Q = 100	m = 4.10 s = 0.189	5.85 0.189	8.78 0.189	9.95 0.189	14.63 0.189
Good Quality Rock Mass *Several sets of moderately weathered joints spaced at 0.3 to 1 m* RMR = 65, Q = 10	m = 2.006 s = 0.0205	2.865 0.0205	4.298 0.0205	4.871 0.0205	7.163 0.0205
Fair Quality Rock Mass *Several sets of moderately weathered joints spaced at 0.3 to 1 m* RMR = 44, Q = 1	m = 0.947 s = 0.00198	1.353 0.00198	2.030 0.00198	2.301 0.00198	3.383 0.00198
Poor Quality Rock Mass *Numerous weathered joints at 30-500 mm, some gouge; clean compacted waste rock* RMR = 23, Q = 0.1	m = 0.447 s = 0.00019	0.639 0.00019	0.959 0.00019	1.087 0.00019	1.598 0.00019
Very Poor Quality Rock Mass *Numerous heavily weathered joints spaced < 50 mm with gouge; waste rock with fines* RMR = 3, Q = 0.01	m = 0.219 s = 0.00002	0.313 0.00002	0.469 0.00002	0.532 0.00002	0.782 0.00002

Empirical Failure Criterion:

$$\sigma_1' = \sigma_3' + \sqrt{m\sigma_c\sigma_3' + s\sigma_c^2}$$

σ_1' = major principal effective stress

σ_3' = minor principal effective stress

σ_c' = uniaxial compressive strength of intact rock, and *m* and *s* are impirical constants

CSIR rating: RMR

NGI rating: Q

Note: 1m = 3.28 ft

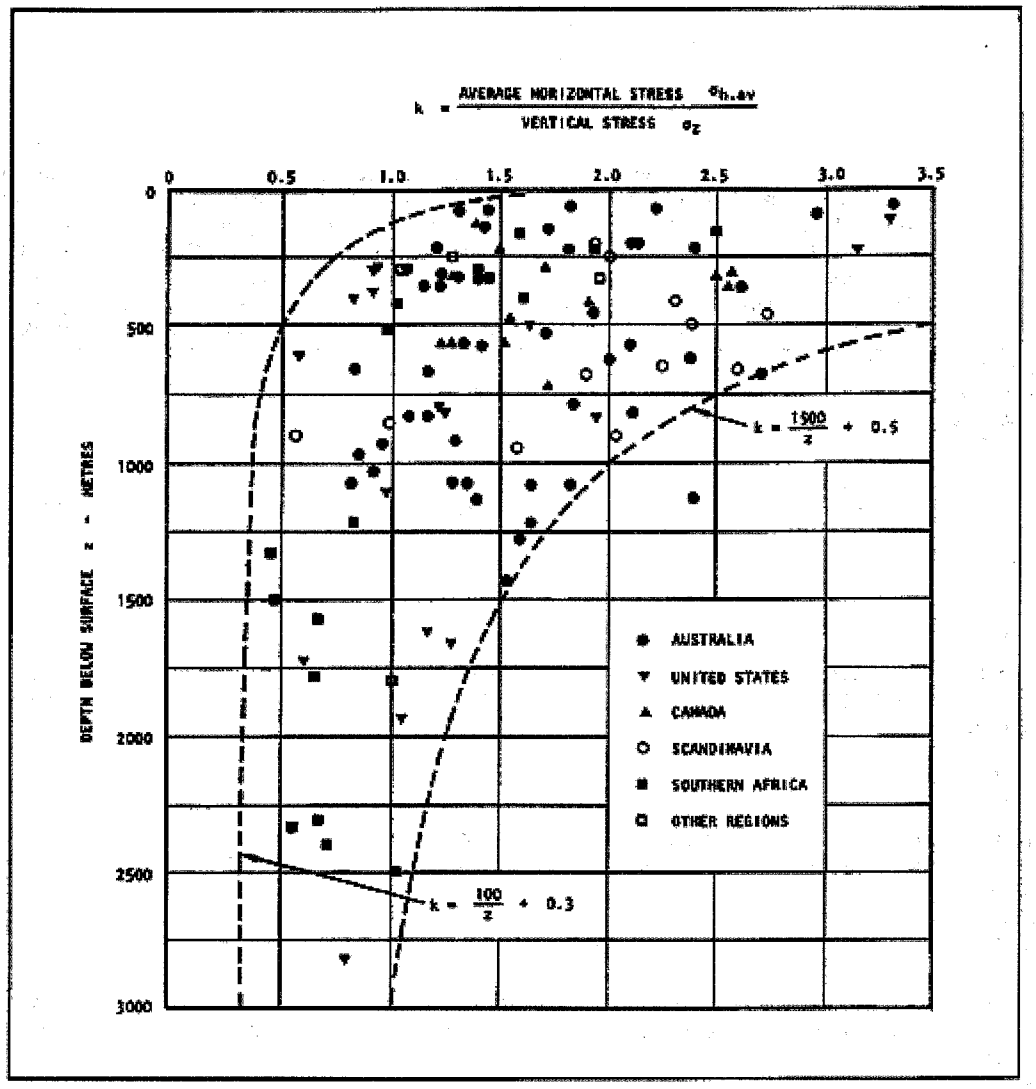

Figure 4-10 – Variation of Ratio of Average Horizontal Stress to Vertical Stress with Depth below the Surface

Convergence-Confinement Method – combines concepts of ground relaxation and support stiffness to determine interaction between ground and ground support. Figure 4-11 illustrates the concept of rock support interaction in a circular tunnel excavated by TBM. The example shows a ground relaxation curve that represents poor rock that requires support to prevent instability or collapse.

The stages described in Figure 4-11 are:

Early installation of ground support (Point D1) leads to excessive build-up of load in the support.

In a yielding support system, the support will yield without collapsing; to reach equilibrium point E1.

A delayed installation of the support (Point D2) leads to excessive tunnel deformation and support collapse (Point E2). The Tunnel Designer can optimize support installation to allow for acceptable displacements in the tunnel and loads in the support.

The convergence-confinement method is also a powerful conceptual tool that provides the designer with a framework for understanding support behavior in tunnels and shafts. Note that Closed-form Solutions or Continuum Analyses are convergence-confinement methods, as they model rock-structure interaction. The ground relaxation/interaction curve can also be defined by insitu measurements.

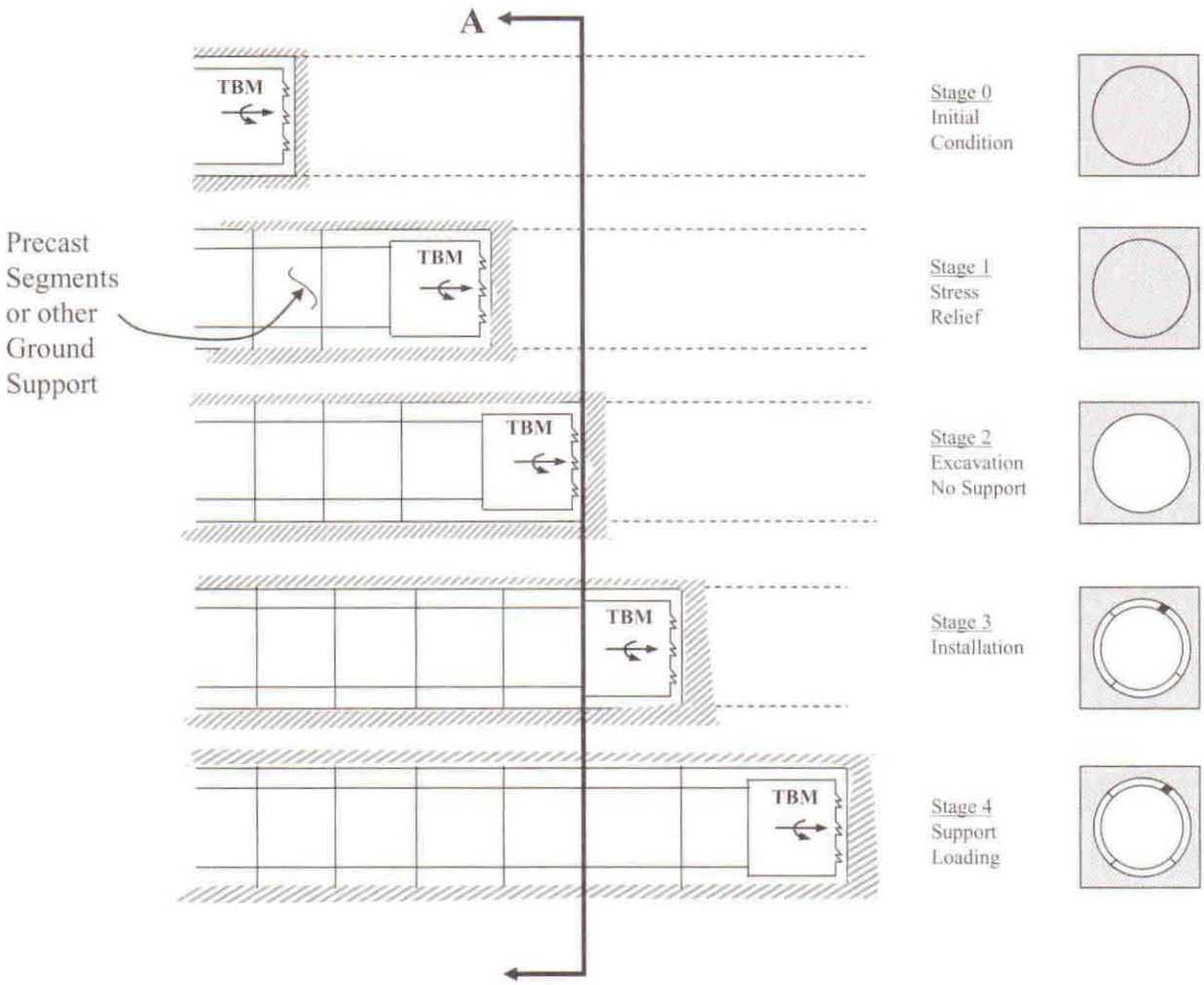

Figure 4-11a – Rock Support Interaction

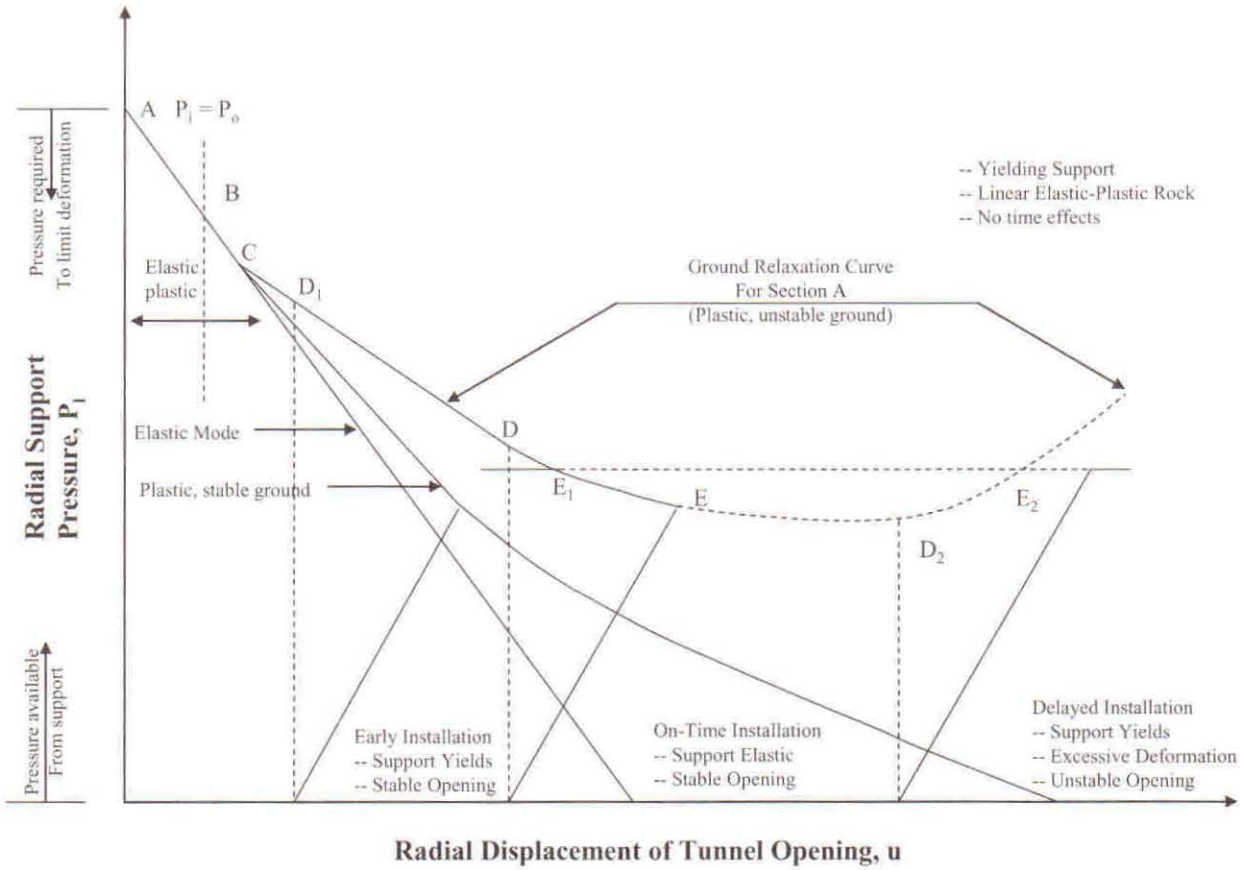

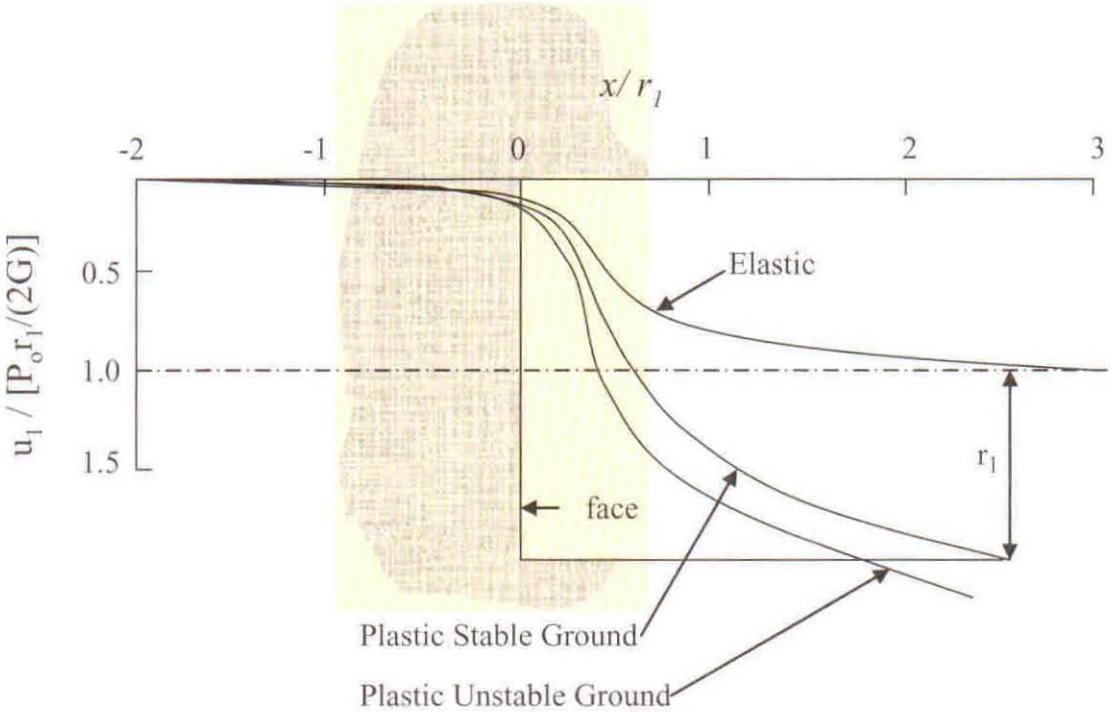

Figures 4-11(b) and (c) – Rock Support Interaction

Stress Analysis – A structure located above ground is built in an unstressed environment, with loads applied as the structure is constructed and as it becomes operational. By contrast, for an underground structure, the excavation creates space within a stressed environment. Stress analyses provide insight into changes in pre-existing stress equilibrium caused by the opening. It interprets the performance of an opening in terms of stress concentrations and associated deformations, and serves as a rational basis for establishing the performance of requirements for design. Prior to excavation, the in-situ stresses in the rock mass are in equilibrium; once the excavation is made, stresses in the vicinity of the opening are redistributed and stress concentrations develop. The redistributed stresses can overstress part of the rock mass and make it yield.

The Tunnel Engineer should consider the initial stress conditions in the rock, its geologic structure and failure strength, the method of excavation, the installed support, and the shape of the opening as the main factors that govern stress redistribution around an opening. Refer to the COE Manual (EM 1110-2-2901, 1997) for treatment of stress analyses for openings in rock.

Continuum Analyses of Tunnel Excavations – This section refers to methods that assume the rock medium to be a continuum, and require the solution of a large set of simultaneous equations to calculate the states of stress and strain throughout the rock medium - the Finite Difference Method (FDM; Cundall, 1976); the Finite Element Method (FEM, Bathe, 1982); and the Boundary element Method (BEM, Venturini, 1983).

The following steps should be used in performing a continuum analysis of tunnel and shaft excavations:

1. Identify the need for and purpose of the continuum analysis;
2. Define computer code requirements;
3. Model the rock medium;
4. Perform two-and three-dimensional analyses;
5. Model ground support and construction sequence;
6. Perform analysis
7. Interpret analysis results;
8. Modify support design and construction sequence;
9. Re-analyze, as required.

Refer to the COE Manual (EM 1110-2-2901, 1997) for treatment of continuum analyses of tunnel and shaft excavations in rock.

Discontinuum Analyses – Rock behaves as a discontinuum, and exhibits behavior different from that assumed in closed-formed solutions and continuum analysis.

The block theory (Goodman & Shi, 1985) and discrete element analysis (Cundall & Hart, 1993) are useful in identifying unstable blocks in large underground chambers, but not in smaller openings such as tunnels and shafts.

f) *Design of Permanent, Final Linings*

Lining Selection -- The Tunnel Engineer should consider final lining options including 1) Unreinforced concrete; 2) Reinforced concrete; and, 3) Segments of concrete. The appropriate lining type should be selected through consideration of: 1) Functional Requirements; 2) Geology and Hydrology; 3) Constructability; and, 4) Economy.

Table 4-6. Summary of Principal Lining Types
(After O'Rourke, 1984; COE EM 1110-2-2901, 1997)

Lining Type	Prominent Features
Unsupported Rock	Suitable for rock of very good quality. Must conform to in-situ stress limitations. Drying and slabbing at rock surfaces may require surface sealants to suppress long-term deterioration.
Rock Reinforcement Systems	Untensioned dowels may be suitable for good quality rock. Tensioned rock bolts more expensive, but provide greater effectiveness. Spiles used to reinforce the ground and increase stand-up time. Cement and resin grouts provide permanent anchorage and corrosion protection. Rock reinforcement often supplemented with shotcrete or mesh to contain loose rock and control spalling.
Shotcrete Lining	Will provide support and may improve leakage and hydraulic characteristics of the tunnel. It also protects the rock against erosion and deleterious action of water. To protect water-sensitive ground, the shotcrete should be continuous and crack-free and reinforced with wire mesh or fibers. As with unlined tunnels, shotcrete-lined tunnels are usually furnished with a cast-in-place concrete invert.
Segmented Systems	Segments generally composed of precast concrete or steel. Leakage often controlled through bolted compression seals. Unbolted, segmented rings with grouted annulus are suitable for some tunnels in rock.
Unreinforced Concrete Linings	This is acceptable if the rock is in equilibrium prior to concrete placement, and loads on the lining are expected to be uniform and radial; and if leakage through minor shrinkage and temperature cracks is acceptable. It is not acceptable in badly squeezing rock, which can exert non-uniform displacement loads.

Table 4-6 summarizes the common options for final lining.

The lining design should account for possible increased leakage with time through permeable geologic features and discontinuities with erodable gouge. It should account for rock-lining interaction, including failure modes and following loads that persist independently of displacement.

The linings of relatively shallow rock tunnels are acted upon primarily by gravity loads which represent the weight of rock wedges adjacent to the tunnel perimeter. These loads are determined by the unit weight of the rock and the system of joints and discontinuities that intersect the rock mass. The loads on a continuous lining can be estimated by considering various combinations of joints that are consistent with the geology and form wedges overlying or adjacent to the tunnel. The maximum support load would be the weight of the largest critical wedge, less the frictional and interlocking resistance developed along sliding planes. There have been many useful studies of critical wedges and support requirements for underground openings including work by Cording and Deere (1972), Brierley (1975), Ward (1978), and Hoek and Brown (1980). The characteristics of the joints (e.g., orientation, frequency, thickness, frictional or cohesive resistance, and degree of inter-locking along joint surfaces) play an important role in determining the amount and distribution of the gravity loads. Accordingly, geotechnical investigations are necessary to characterize the rock structure and to make a quantitative assessment of the rock and joint characteristics for load evaluation.

Methods have been proposed for selecting rock support systems on the basis of empirical correlations between support and various qualitative and quantitative classifications of the rock mass (Terzaghi, 1946; Deere, Merritt and Coon, 1969; Wickman, Tiedemann and Skinner, 1974; Barton, Lien and Lunde, 1977; Bieniawski, 1979). These classification systems are helpful in obtaining an estimate of support needs. The designer usually requires a more detailed assessment to determine the type and dimensions of the permanent lining. Cording and Maher (9178) outline a general approach that provides amore comprehensive determination, according to the following steps: 1) evaluation of the geology and significant rock index properties; 2) estimation of rock loads consistent with the construction procedure and the models of rock behavior for the given geologic setting and excavation geometry; and 3) selection of the support best suited for the construction procedure and intended lifetime services of the facility.

Tunnel excavation changes the state of stress in the rock mass. As a result, tunnel linings are rarely designed for loads equivalent to the in-situ state of stress; such a load would often be impractical to support and usually does not exist at the time of final lining construction.

The reduction of in-situ stress often is expressed in the form of a ground-response curve, in which the radial pressure at the lining-ground interface is plotted as a function of the inward radial displacement. Ground response curves have been developed for various models of material behavior, as discussed by Brown et al. (1983). In rock tunnels of shallow depth, very small displacements are sufficient to cause substantial reductions in radial stress. In tunnels excavated under conditions of high in-situ stress in rock of relatively low strength, plastic behavior may lead to substantial inward movement before the rock mass can mobilize sufficient shear strength to reduce radial pressure. Ground response curves for this type of squeezing ground conditions have been used on a conceptual basis for coordinating initial support installation and inward convergence measurements during the construction of several European highway tunnels (e.g., Rabcewicz, 1969; Rabcewicz, 9175; Steiner, Einstein and Azzouz, 1980).

The most important material for the stability of a tunnel is the rock mass, which accepts most or all of the distress caused by excavation of the tunnel opening by redistributing stress around the opening. The rock support and lining contribute mostly by providing a measure of confinement. A lining placed in an excavated opening that has reached stability (with or without initial rock support) will experience no stresses except due to self-weight. On the other hand, a lining placed in an excavated opening in an elastic rock mass at the time that 70 percent of all latent motion has taken place will experience stresses from the release of the remaining 30 percent of displacement. The actual stresses and displacements will depend on the modulus of the rock mass and that of the tunnel lining material. If the modulus or the in-situ stress is anisotropic, the lining will distort, as the lining material deforms as the rock relaxes. As the lining material pushes against the rock, the rock load increases.

Failure Modes for Concrete Linings -- The rock load on tunnel ground support depends on the interaction between the rock and rock support, and overstress can often be alleviated by making the rock support more flexible. It is possible to redefine the safety factor for a lining by the ratio of

the stress that would cause failure and the actual induced stress for a particular failure mechanism. Failure modes for concrete linings include collapse, excessive leakage, and accelerated corrosion. Compressive yield in reinforcing steel or concrete is also a failure mode; however tension cracks in concrete usually do not result in unacceptable performance.

Following Loads – These loads persist independently of displacement, and include, for example, hydrostatic load from formation water; loads resulting from swelling and squeezing rock displacements, which are not usually uniform and can result in substantial distortions and bending failure of tunnel linings.

Linings subject to bending and distortion – In most cases, the rock is stabilized at the time the concrete lining is placed, and the lining will accept loads only from water pressure. However, reinforced concrete linings may be required to be designed for circumferential bending in order to minimize cracking and avoid excess distortions. Figure 4-12 shows some general recommendations for selection of loads for design. Conditions causing circumferential bending in linings are as follows:

- Uneven support caused by a layer of rock of much lower modulus than the surrounding rock, or a void left behind the lining;
- Uneven loading caused by a volume of rock loosened after construction, or localized water pressure trapped in a void behind the lining;
- Displacements from uneven swelling or squeezing rock;
- Construction loads, such as from non-uniform grout pressures.

The most important types of methods for analyzing tunnel linings for bending and distortion are:

- Free-standing ring subject to vertical and horizontal loads (no ground interaction);
- Continuum mechanics (closed solutions)
- Loaded ring supported by springs simulating ground interaction (many structural engineering codes);
- Continuum mechanics (numerical codes).
- The designer must select the method which best approximates the character and complexity of the conditions and the tunnel shape and size.

1. Continuum Mechanics, Closed Solutions – Moments developed in a lining are dependent on the stiffness of the lining relative to that of rock. The relationship between relative stiffness and moment can be studied using the closed solution for elastic interaction between rock and lining. The equations for this solution and the basic assumptions are shown in Figure 4-13. These assumptions are

1. Minimum loading for bending: Vertical load uniformly distributed over the tunnel width, equal to a height of rock 0.3 times the height of the tunnel;
2. Shatter zone previously stabilized: Vertical uniform load equal to 0.6 times the tunnel height;
3. Squeezing rock: Use pressure of 1.0 to 2.0 times tunnel height, depending on how much displacement and tunnel relief is permitted before placement of concrete. Alternatively, use estimate based on elastoplastic analysis, with plastic radius no wider than one tunnel diameter.
4. For cases 1, 2, and 3, Use side pressures equal to one-half the vertical pressures, or as determined from analysis with selected horizontal modulus. For excavation by explosives, increase values by 30 percent.
5. Swelling rock, saturated in-situ: Use same as 3, above.
6. Swelling rock, unsaturated, or with anhydrite, with free access to water: Use swell pressures estimated from swell tests.
7. Non-circular tunnel (horseshoe): Increase vertical loads by 50 percent.
8. Non-uniform grouting load, or loads due to void behind lining: Use maximum permitted grout pressure over area equal to one-quarter of tunnel diameter, maximum 5 ft (1.5 m).

Figure 4-12 – General Recommendations for Loads and Distortions (After COE EM 1110-2-2901, 1997)

hardly ever met in real life, except when a lining is installed immediately behind the

advancing face of a tunnel or shaft, before elastic stresses have reached a state of plane strain equilibrium. Nonetheless, the solution is useful for examining the effects of variations in important parameters. Note that the maximum moment is controlled by the flexibility ratio.

Analysis of Moments & Forces using FEM – Moments and forces in circular and non-circular tunnel linings can be determined using structural FEM computer programs. Such analyses have the following advantages:

- Variable properties can be given to rock as well as lining elements;
- Irregular boundaries and shapes can be handled;
- Incremental construction loads can be analyzed, including, for example, loads from backfill grouting;

Assumptions:

Plane strain, elastic radial lining pressures are equal to in situ stresses, or a proportion thereof

Includes tangetial bond between lining and ground

Lining distortion and ompression resisted/relieved by ground reactions

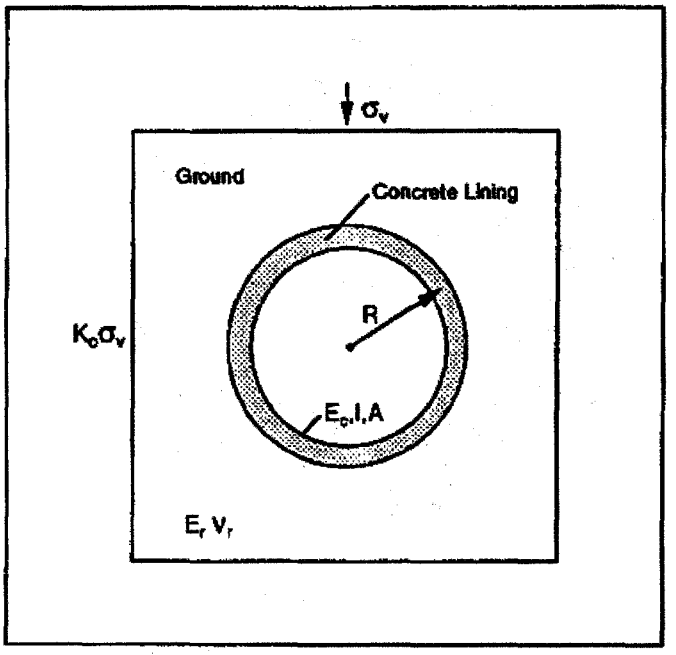

Maximum/minimum bending movement

$$M = \pm\sigma_v (1 - K_o) R^2/(4 + \frac{3 - 2\nu_r}{3(1 + \nu_r)(1 + \nu_r)} \cdot \frac{E_r R^3}{E_c I}$$

Maximum/minimum hoop force

$$N = \sigma_v (1 + K_o) R/(2 + (1 - K_o) \frac{2(1 - \nu_r)}{(1 - 2\nu_r)(1 + \nu)} \cdot \frac{E_r R}{E_c A}) \pm \sigma_v (1 - K_o) R/(2 + \frac{4\nu_r E_r R^3}{(3 - 4\nu_r)(12(1 + \nu_r) E_c I + E_r R^3)}$$

Maximum/minimum radial displacement

$$\frac{u}{R} = \sigma_v (1 + K_o) R^3/(\frac{2}{1 + \nu_r} E_r R^3 + 2E_c A R^2 + 2E_c I) \pm \sigma_v (1 - K_o) R^3/(12 E_c I + \frac{3 - 2\nu_r}{(1 + \nu_r)(3 - 4\nu_r)} E_r R^3)$$

Figure 4-13 – Lining in Elastic Ground, Continuum Model (After COE EM 1110-2-2901, 1997)

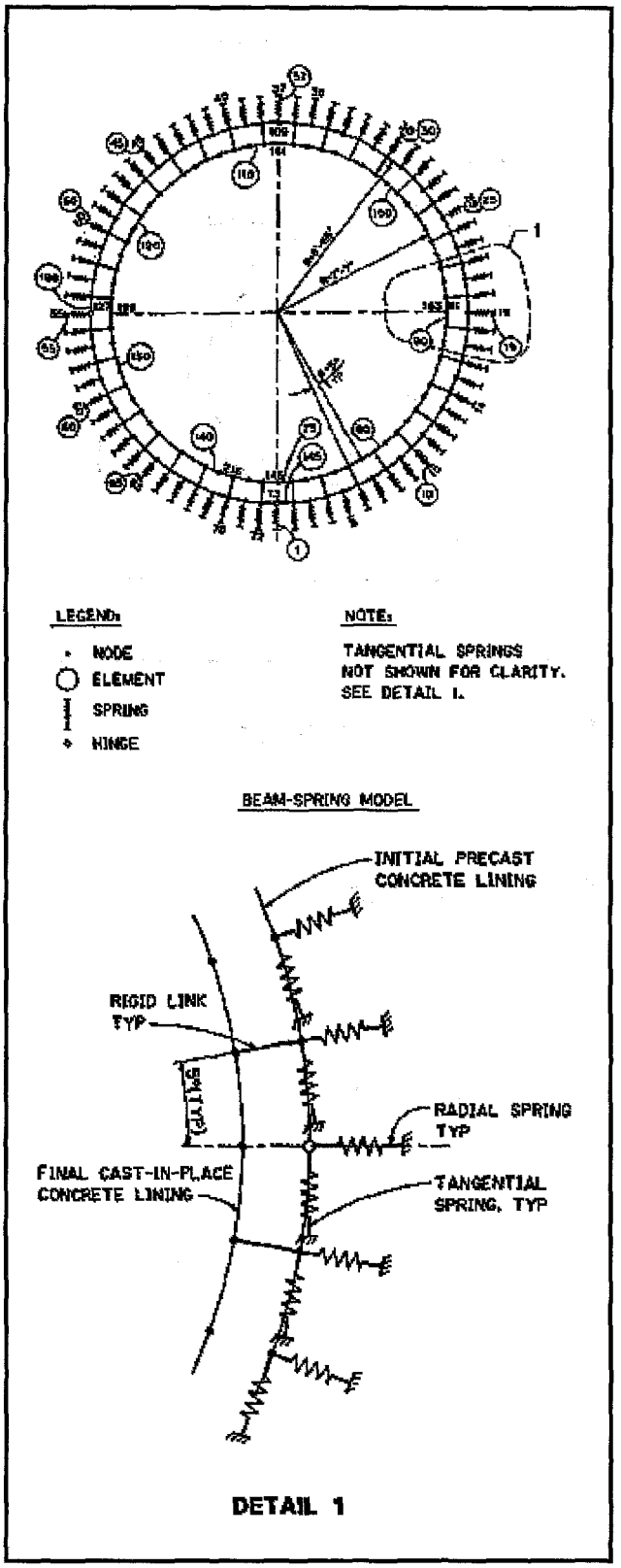

Figure 4-14 – Discretization of a two-pass lining system for Analysis

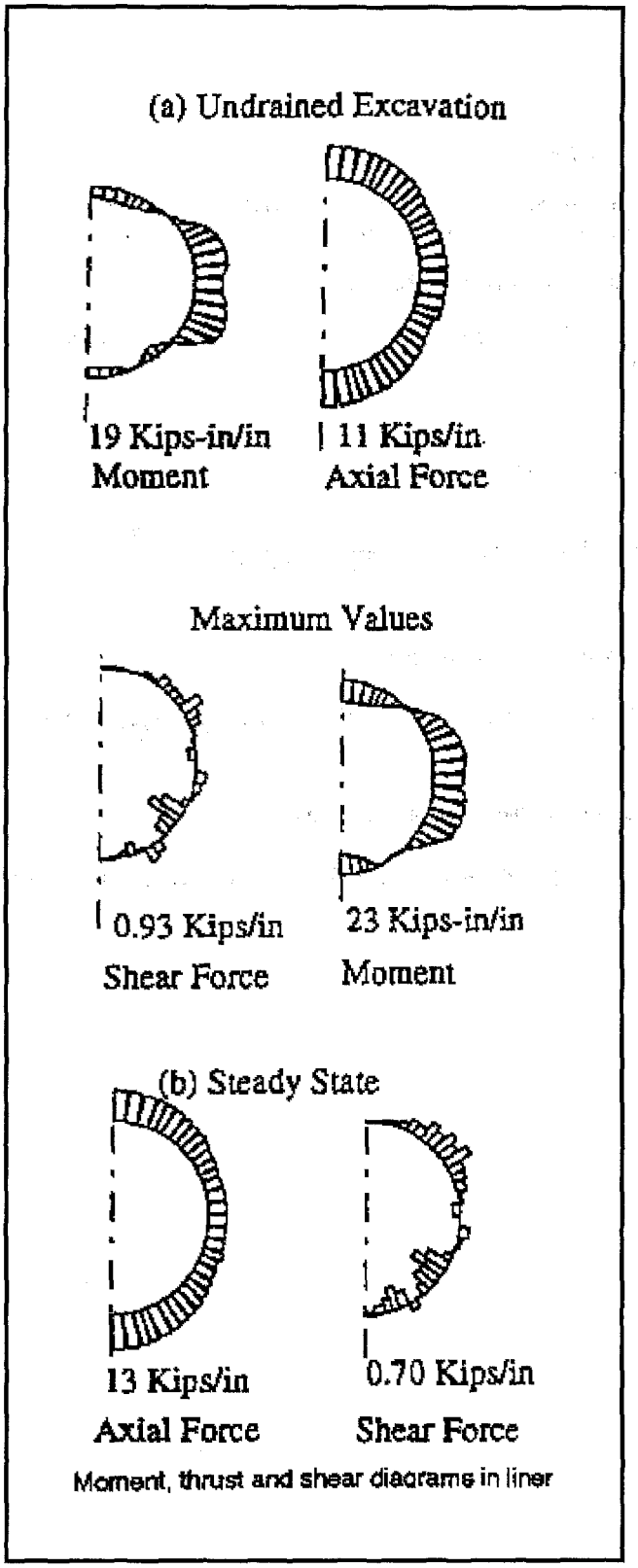

Figure 4-15 – Moments and Forces in lining shown in Figure 4-14

- Two-pass lining interaction can also be analyzed.

Figure 4-14 shows the FEM model for a two-pass lining system. The initial lining is an unbolted, segmental concrete lining, and the final lining is reinforced cast-in-place concrete with an impervious waterproofing membrane.

Rigid links are used to inter-connect the two linings at alternate nodes. These links transfer only axial loads and have no flexural stiffness and a minimum of axial deformation. Hinges are introduced at crown, invert and spring-lines of the initial lining to represent the joints between the segments.

2. Continuum Analysis, Numerical Solutions – As discussed under Section f) Geomechanical Analyses, continuum analyses provide the complete stress state throughout the rock mass and the support structure. These stresses are used to calculate forces and bending moments in the components of the support structure. The forces and moments give the designer information on the working load to be applied to the structure and can be used in the reinforced concrete design. Figure 4-15 shows a sample output of moment and force distribution in a lining of a circular tunnel under two different excavation conditions.

3. Design of Concrete Cross Section for Bending and Normal Force – once bending moment and ring thrust in a lining have been determined, or a lining distortion estimated, based on rock-structure interaction, the lining must be designed to achieve acceptable performance. Since the lining is subjected to combined normal force and bending, the analysis is conveniently carried out using the capacity-interaction curve, also called the moment-thrust diagram. The American Concrete Institute Code ACI 318-83 (ACI Committee 318, 1983) procedure for construction of the diagram can be used. The interaction diagram displays the envelope of acceptable combinations of bending moment and axial force in a reinforced or unreinforced concrete member. As shown in Figure 4-16, the allowable moment for low values of thrust increases with the thrust because it reduces the limiting tension across the member section. The maximum allowable moment is reached at the so-called balance point. For higher thrust, compressive stresses reduce the allowable moment. General equations to calculate points of the interaction diagram are shown in EM 1110-2-2104.

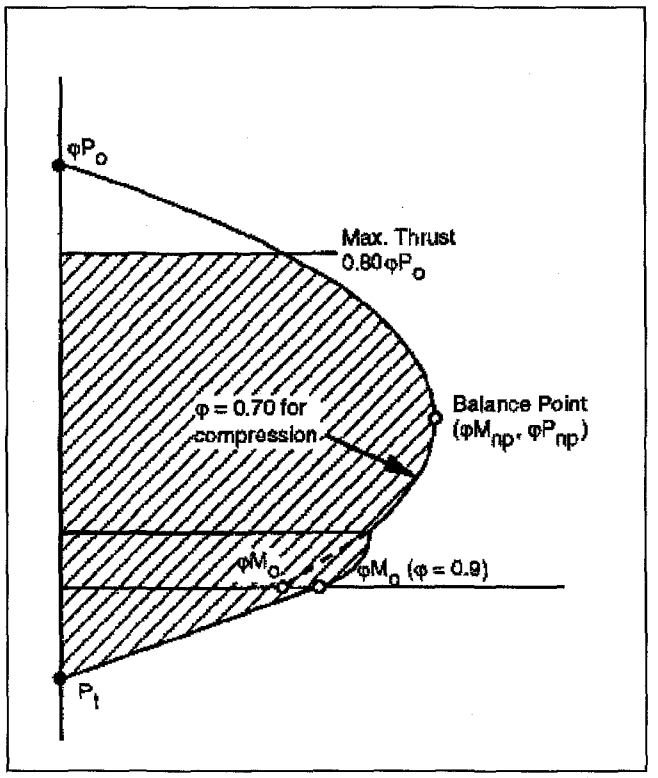

Figure 4-16 – Capacity –Interaction Curve

Interpretation of Analytical Results – For all analytical methods, it is important to recognize that the precision of the analysis greatly exceeds the precision with which the controlling properties of the ground can be determined. Furthermore, a single lining system is commonly used for a long length of tunnel over which there are considerable variations in ground properties. Analytical properties are therefore useful for investigating the sensitivity of lining sections to variations of individual parameters, and for placing bounds on possible lining behavior. It should not be assumed that tunnel lining analyses can determine actual stresses in real tunnels with anything like the precision associated with the structural analysis of building frames subject to well-defined loads.

Several investigators have evaluated how the results of various theoretical models relate to the field performance of actual linings. A general summary of lining design models, based on continuum mechanics principles, has been given by Duddeck and Erdman (1982), and a number of design assumptions have been investigated and compared with tunneling practice by Schmidt (1984). Kuesel (1983) has discussed the practical constraints on model applications and has summarized several simplified relationships between ground loads and the dimensions of typical lining systems

Application of Codes – Structural codes should be used cautiously. Most codes have been written for above-ground structures on the basis of assumptions that do not consider ground-lining interaction. Accordingly, the blind application of structural design codes is likely to produce limits on the capacity of linings that are not warranted in light of the substantial contributions from the ground and the important influence of construction method on both the capacity and cost of linings.

Shear stresses resulting from the analysis may be compared directly with the shear strength calculated from Section 11.3 of ACI 318-83 which takes into account the effect of thrust. If part of the lining for which the shear is checked is near a corner or a knee of an arch that may be considered a support for the member, the shear should be checked at a distance equal to the effective depth from the face of the support. If there is no such support, as in a circular tunnel, shear should be checked at the point of its maximum value. Shear strength of embedded steel supports may be added to that of the concrete sections. It is not recommended that shear reinforcement be provided as stirrups, and therefore, the thickness would normally be adjusted to resist shear if needed. Concentrated loads from rock wedges may cause high shear at their edges, and this condition should be checked.

h) Excavation Methods –

The Design Engineer should evaluate the following three excavation methods, which may be used separately or in combination:

- TBM, for full-face, circular sections only;
- Road header, for partial face advance, any cross section, or full-face for small sections;
- Drill-and-blast, for full or partial face advance, any cross section.

TBM Excavation – In general, TBM tunnels have high start-up (pre-excavation) costs and long lead time; the high rate of advance reduces the final per-foot excavation cost. The total machine length (TBM proper plus necessary trailing gear) may approach 1,000 ft (305m) in length.

The principal constraint on road headers is that they currently are usable only in rock of less than about 12,000 psi (83,000 kN/m^2) compressive strength. Stronger rock can be cut or chipped away if it is sufficiently fractured. With favorable geology and properly sized and equipped machine, they are capable of advances of up to 100 ft (30.5m) per day. The manner of cutting results in fairly small-sized muck fragments. Mechanically collected in the invert apron of the road header, they are delivered to the rear of the machine by an integral conveyor.

Drill and blast Excavation: This is the conventional method for non-circular cross sections and also for circular tunnels too short to amortize the high start-up costs of a TBM. Drill-and-blast method should also be used when encountering great geologic variety, or other specific condition, such as: mixed-face, squeezing ground, etc.

Advancing the Face – Full-face advance (excavating the complete tunnel section in one operation) should be recommended, when possible, depending on the geology, "active span" of opening (width of tunnel, or the distance from support to the face, whichever is less), and "stand-up time" (the time an opening can stand unsupported). The Lauffer diagram (Figure 4-17) displays, qualitatively, the range of stand-up times for various geologies. The figure is based on experience in the Alps; 'A' represents "best rock mass", and 'G' represents "worst rock mass"; shaded area indicates practical relations.

Thus, an increase in tunnel size leads to a drastic reduction in stand-up time, since the allowable size of the face obviously must be related to allowable active span

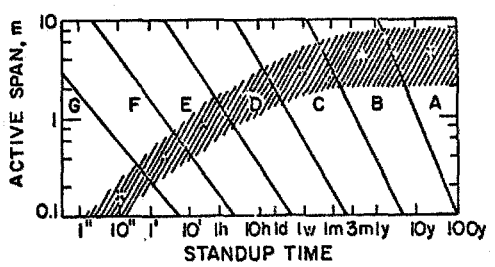

Figure 4-17 – Active span vs. Stand-up Time (Brekke and Howard, 1972)

Heading and Bench – When stand-up time is not adequate to install support, the round length should be shortened or partial face advance should be used to reduce cycle time. The most common approach is heading and bench.

A top heading is excavated first; this can extend the full length of the tunnel or may be as short as a single round length. Heading size should depend on the time required to install necessary support or reinforcement for the arch. Once the roof or back is secure, the bench can be excavated.

Multi-drift Advance – If stand-up time is insufficient for heading and bench advance, either

because of the geology or large spans, the top heading should be divided into two or more drifts. Advantages to doing this include:

1. Increase in stand-up time from reduced span;
2. Decrease in mucking time from reduced volume;
3. Reduction in time required to install support or reinforcement.

NATM – NATM was discussed earlier in Chapter *4.4 - Soft Ground Tunneling*. As discussed here, it is a multi-drift approach based on observational procedure for verifying adequacy of installed support. Best judgment and past experience were combined to select an initial drift size and accompanying stabilization system. Measurements were made to determine if inward movements were decreasing or if additional stabilization was necessary. Theory was developed gradually and more difficult ground conditions were evaluated.

Shotcrete and rock bolts should be used; they are available, inexpensive, and can easily be augmented when the initial array must be reinforced. Shotcrete can also be used to temporarily stabilize the face of each advance, when necessary.

Lattice girders are a frequent component of NATM, and consist of three or four sizeable concrete reinforcing bars arranged in triangular or trapezoidal section, pre-bent to the shape of the excavation periphery, and joined together into a pre-fabricated unit with continuous small-diameter lattice bars. After erection, the girder is filled and encased in shotcrete, and becomes an integral part of the initial support membrane.

i) Effect of Excavation Method on Design –

Unless the specifics of a tunnel clearly indicate the superiority of one excavation method over the other, the contract documents should leave the choice to the contractor.

However, the Tunnel Designer should consider and anticipate the following

- Use of different stabilization patterns for a TBM drive than for drill-and-blast excavation (for example, use of circular steel ribs throughout, rather than only where required by bad ground).
- Preclusion of shotcreting within 500 ft (152m) of the cutter head of a TBM because the bulk of the machine inhibits access to the tunnel walls and shotcrete rebound would foul the TBM.
- Use of Pattern Bolting in rock of high mass strength, where the TBM is usually advanced by thrusting outward laterally with gripper jacks to provide the necessary resistance to the thrust of the TBM ram jacks.
- Excavation of TBM tunnel full-length for the largest diameter required (i.e., steel rib or similar system) when tunnels have both good and bad reaches. The rib or similar system then must be used full length, unless the TBM tail skin is slotted to permit rock bolting, or is equipped with both thrust jack and gripper propulsion systems and time is taken to change over from one system to the other, when necessary.

4.6 Mixed-Face or Difficult Ground

The Tunnel Designer should consider factors related to:

a) *Instability* -- Can arise from lack of stand-up time in: non-cohesive sands and gravels (especially below the water table) and weak cohesive soils with high water content, or in blocky and seamy rock; adverse orientation of joint and fracture planes; or the effects of flowing water

b) *Heavy Loading:* -- For a tunnel driven at depth in weak rock, squeezing, popping or explosive failure of the rock mass may be experienced due to heavy loading. For combinations of parallel and intersecting tunnels, loadings should be evaluated carefully by the Tunnel Designer.

c) *Obstacles and Constraints* – Special consideration should be given to natural obstacles, such as: boulder beds, in association with running silt and caverns in limestone. In urban areas, potential constraints include: abandoned foundations and piles, support systems for buildings in use and for future development.

d) *Physical Conditions* – The designer should consider the potential for noxious gases in areas affected by recent tectonic activity or continuing geothermal activity; rock of organic origin; elevated temperatures; and contaminated soil.

e) *Mixed-Face Tunneling* – This term should be taken to refer to situations, such as:

- when the lower part of the working face is in rock while the upper part is in soil, or vice versa;
- hard rock ledges in a soft matrix;
- beds of hard rock alternating with soft, decomposed, or weathered rock; or
- non-cohesive granular soil above hard clay;
- boulders in a soft matrix; or hard nodular inclusions in soft rock (flint beds in chalk, or garnet in schist).

Consideration should be given to the potential for water flow into the tunnel once the mixed condition is exposed, increasing further destabilization potential. Groundwater control and adequate, continuous support of the weak material should be used to stabilize the hazard. The best time to seal off groundwater is before it starts to flow into the tunnel; otherwise, a bulkhead should be needed to stop it from within the tunnel.

f) *Drill-and-Blast Tunneling* -- In squeezing ground, a closer approximation to a circular tunnel shape offers improved stability and longer tunnel life over variations to the horseshoe shape offered by this traditional method.

The Tunnel designer should consider techniques against excessive ground loading on the tunnel, such as:

- concrete-filled drifts;
- steel supports, and;
- use of yielding supports when ground conditions make it imperative to provide for greater convergence for stress relief; support system provides a relatively low initial support pressure, and permits almost uniform stress relief for the rock in a controlled manner, around the entire tunnel circumference, while preventing the rock from raveling (Figures 4-18 and 4-19).

Long-term support resistance should be increased by adding small amounts of shotcrete at the junction between the side wall and the invert slab and in the roof arch, as illustrated in Figure 4-19. This additional shotcrete should be applied at a distance from the working face that will avoid interference with main production operations.

g) *TBM Tunneling in squeezing ground* -- In fault crossings, water inflow carrying sand and fine rock tend to jam the cutters; cutter head design should allow only limited projection of the cutters forward of the cutter head, using a face shield ahead of the structural support element. Design should permit changing of worn cutters from within the tunnel, requiring no access in front of the cutter head.

A short shrinkable shield should be used on the machine, to prevent closure of the ground around the cutter head shield and consequent immobilization of the TBM from the load on the shield system being too high to permit the machine to advance.

It is practical to delay major support installation until a high percentage of the total strain has taken place and ground loading has been reduced, to prevent immediate instability from squeezing of the soft rock.

<u>TBM Tunneling System</u>: The Tunnel designer should note that the following TBM components are affected by the difference between tunneling in squeezing and non-squeezing ground:

i. <u>Cutter head</u> -- while the cutter head design is selected on the basis of the ground to be penetrated, the gauge cutters should be designed to be changed from behind, and a lighter false face should be provided so that the cutter disks protrude only a short distance. However, in weak ground a closed-face shield should be used.

ii. <u>Propulsion</u> – Limit the bearing pressure on the tunnel walls to prevent failure of the weak rock, even under light loads. Use of multiple grippers covering most of the circumference should be considered; the grippers should be of limited length to minimize uneven bearing on the squeezing rock face.

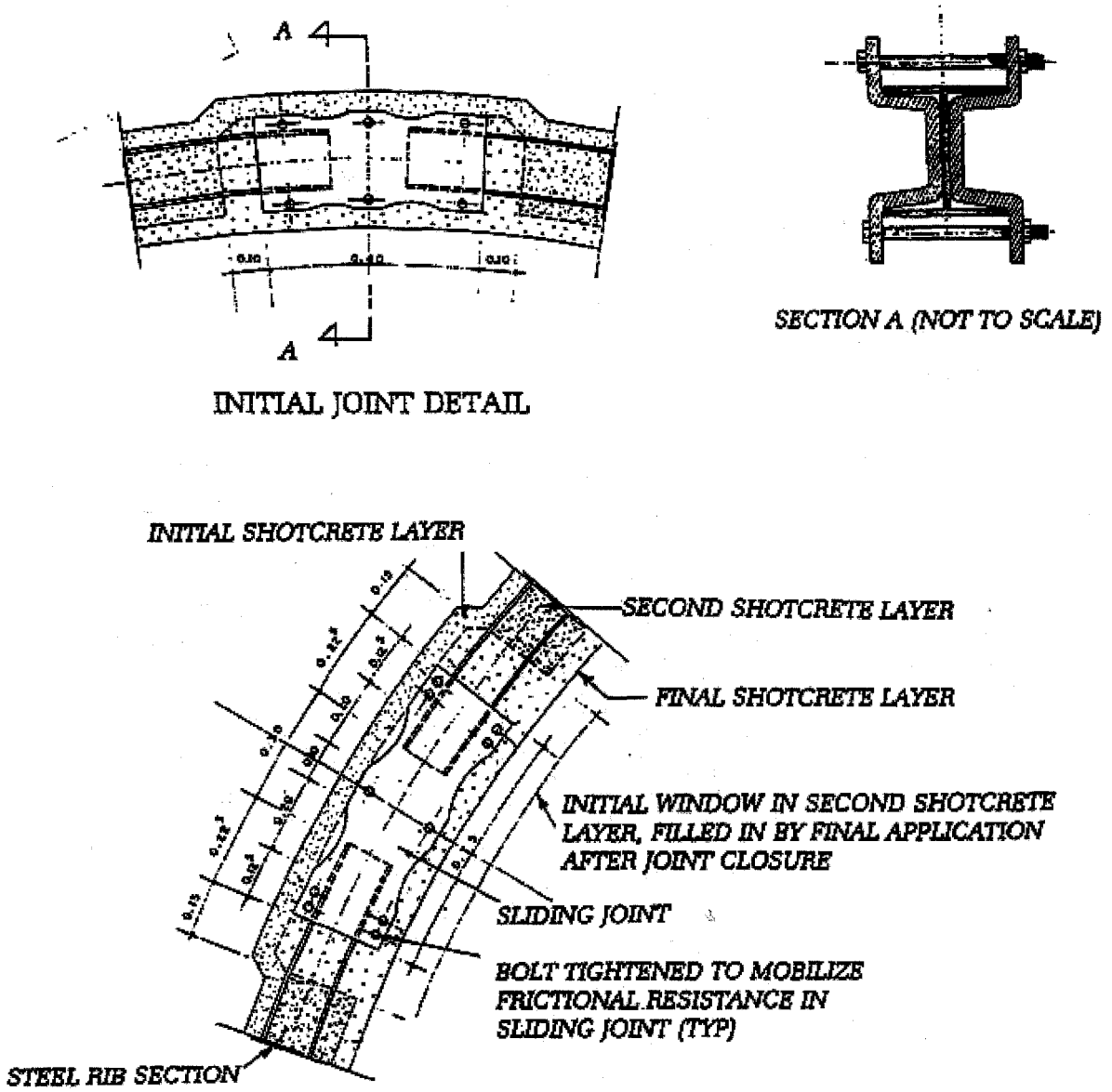

Figure 4-18 – Details of Yielding Sets at Yacambu (after Bickel et Al., 1996)

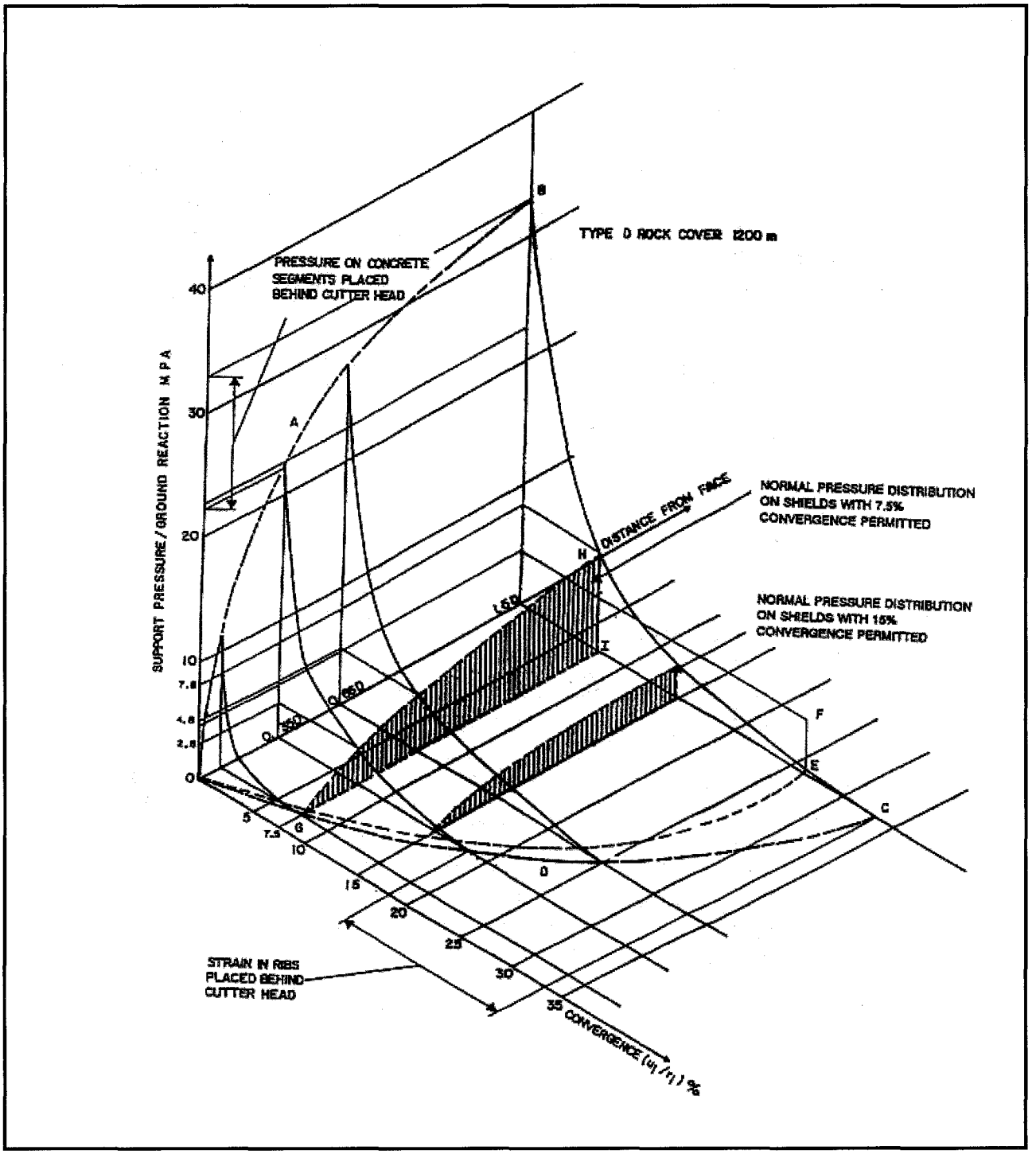

Fig. 4-19 – Relationship/ Convergence, Distance behind Working Face & Ground Pressure for Poor Quality Rock with 1,200 m of Cover (after Senthivel, '94)

Erector – The erector should be free to move along the tunnel, mounted on the conveyor truss, for complete flexibility in selecting the point at which ring erection is to take place.

Spoil Removal – conventional conveyor to rail car systems, or single conveyor systems designed for the tunnel size selected, are appropriate.

Back-up System – any ancillary equipment should be kept clear of the area between the grippers and the ring erection area at track level.

4-7 Shafts

a) General --

Tunnels built through urban areas should consider using shafts to reach the working area and to provide for muck removal to minimize interference with existing services. Temporary tunnel shafts are used by the contractor during construction while permanent shafts will become an integral part of the tunnel structure.

b) Shaft Excavation in Soft Ground --

Installation Rate -- The rate of primary shaft lining installation should depend on the type of lining and the nature of the soil medium; installation every 4 or 5 ft (1.2 or 1.5 m) of advance is normal, albeit, shafts have been sunk up to 30 ft (9 m) without support.

Shaft Configuration -- Permanent shafts should be round, oval (NATM) or rectangular in shape and usually will have a final lining of concrete, which may be cast, either with forms on both sides or on the inside only, with the ground support system on the outside.

Shaft Support System -- The shaft support system should be designed to prevent plastic yielding during shaft sinking in soft ground, and damage to existing structures. The choice of sheeting and bracing system should be dictated by soil characteristics, shaft depth, diameter and economic factors, and should include consideration of: Timber Sheet Piling; Steel Sheet Piling; Soldier Piles and Lagging; Liner Plates; Horizontal Ribs and Vertical Lining; Slurry Walls; and a NATM Shaft Support System (shown in Figure 4-20).

Excavation in Soft Wet Ground – Design of shaft excavation in soft wet ground should evaluate: methods of lowering the groundwater table; Open Pumping; use of a well point system, or deep wells; Soil Freezing; use of slurry; grouting; sinking a pneumatic caisson; and sinking a dredged drop caisson with a tremie concrete seal (Figures 4-21 and 4-22).

c) Shaft Excavation in Rock

Shaft excavation for tunnels are usually less than 120 ft (36.6 m) deep and, in rock, should be excavated by the drill-and-blast method. The designer should refer to standard Foundation Engineering texts for shaft construction in rock, and temporary and permanent walls through weathered rock

Temporary Supports – In sedimentary, fractured or blocky rock, rock support should be placed quickly after excavation, when required. Evaluation of support type should include consideration of: Steel ribs and liner plates, steel ribs with lagging; rock bolts, with or without wire mesh; or shotcrete. Generally, all the various types of supports described earlier for support of soft ground shafts can be used (with some modification) in rock shafts.

d) Final Lining of Shafts –

The planned permanent usage of the shaft should determine the type of final lining; however, concrete or rock bolts and wire mesh/shotcrete lining should be considered.

e) The New Vertical Shield Tunnel –

This is a new system where a shield machine bores upward to excavate a vertical shaft from the shielded tunnel with the primary lining.

The method has achieved successful results in reducing construction time and costs, enhancing work safety, minimizing public environmental hazard caused by construction noise, vibration, etc.

A synopsis of the method as used in excavating shafts on the Bandai-Hannan Trunk Sewer project is given by Konoha & Yamamoto (2002). Photo 4-7A shows a 7.5 ft (2.28m) dia. EPB shield machine used for sewerage tunnel in Japan.

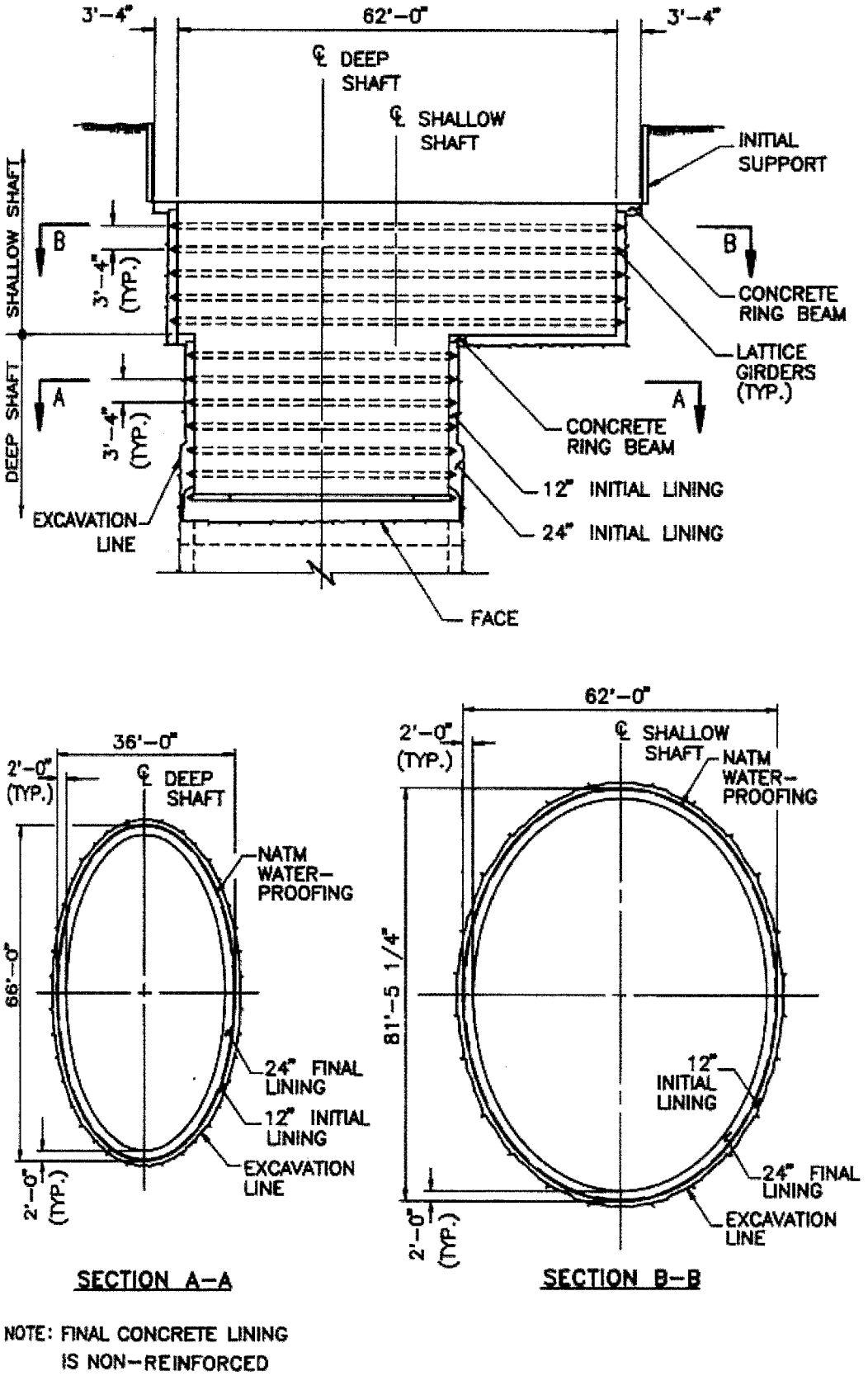

Note: 1 ft = 0.3048m.

Figure 4-20 – NATM System Shaft (final concrete lining is non-reinforced)

a)

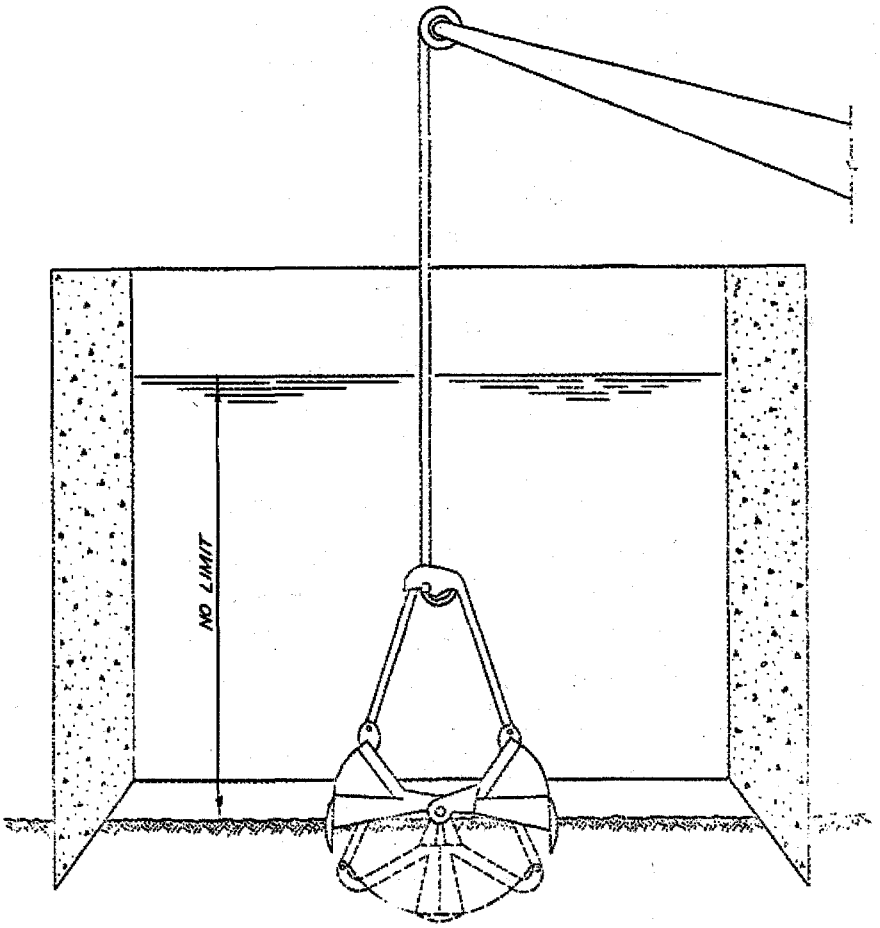

b)

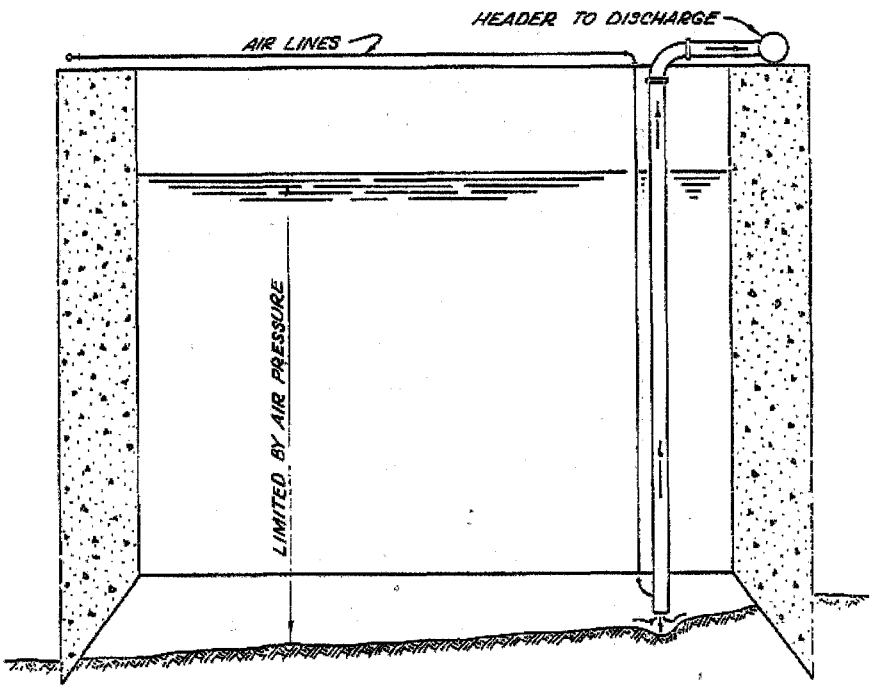

Figure 4-21 – Schematic Representation of Dredged Caisson; a) Excavation by Clamshell, b) by Airlift.

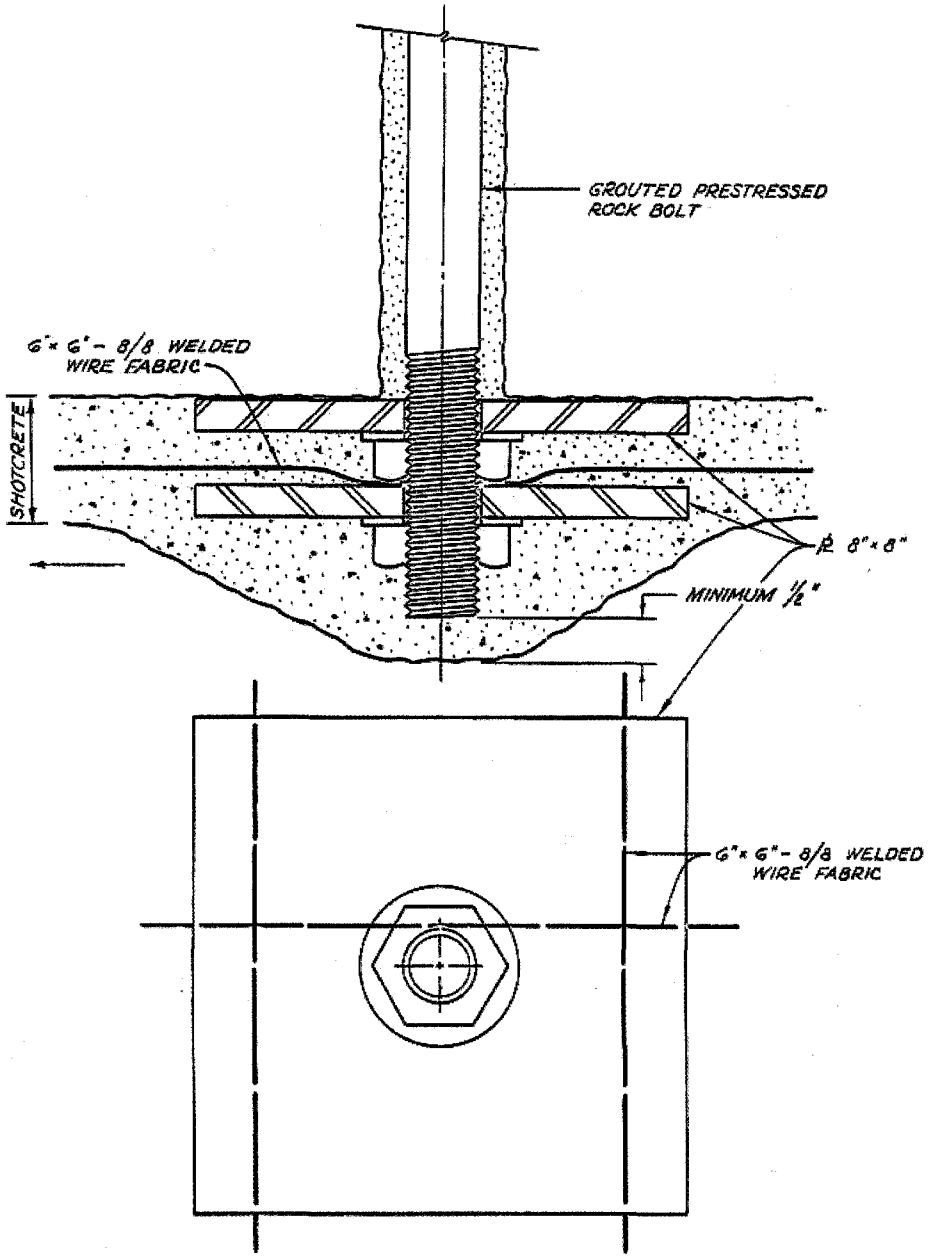

Note: 1 ft = 0.3048m

Figure 4-22 – Typical Installation of Rock Bolts, Wire Mesh, and Shotcrete, Washington Metro

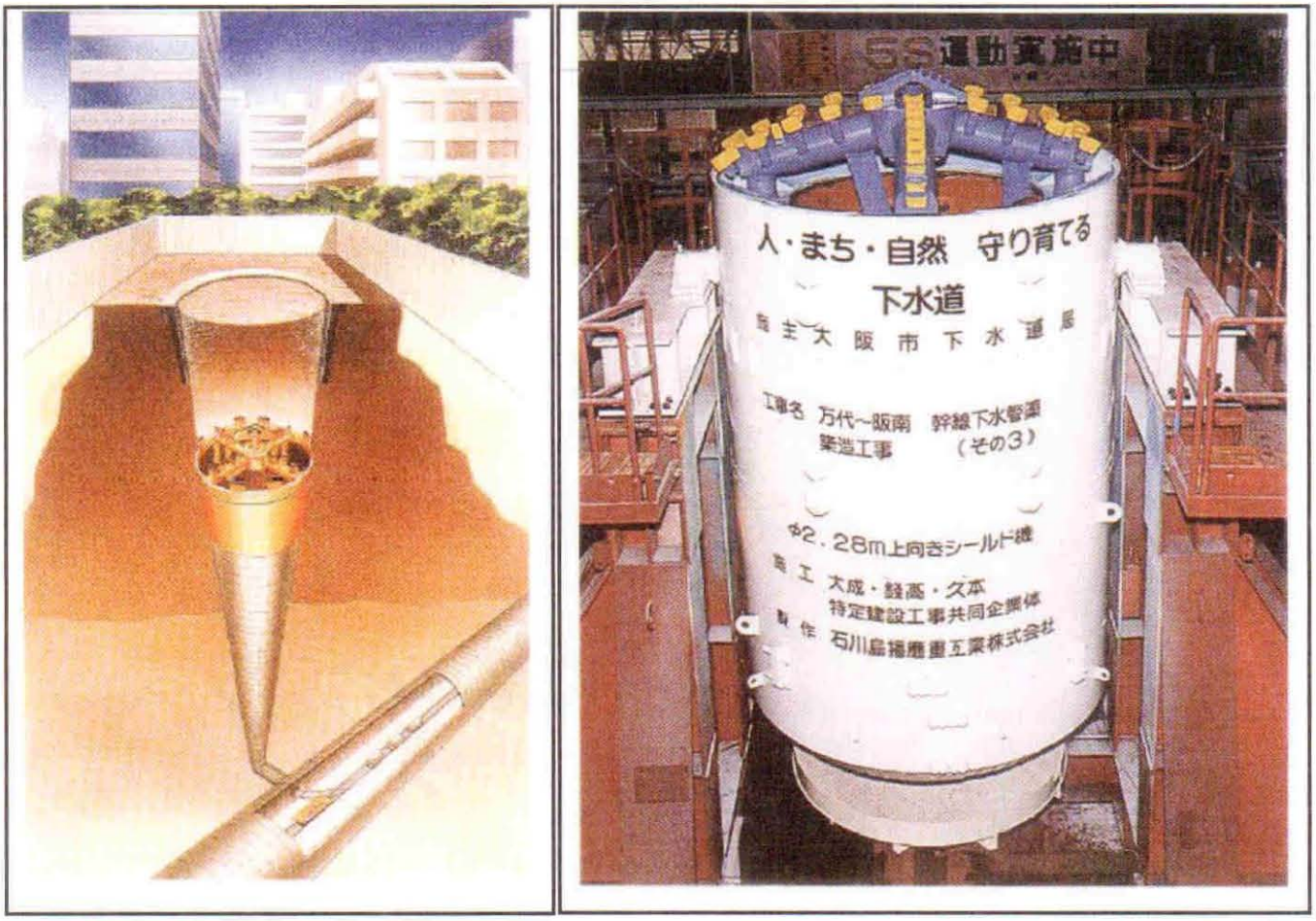

Photo 4-7A – Ascending EPB Shield Machine
Courtesy, Ishikawajima-Harima Heavy Industries Co., Ltd. (IHI)

4-8 Shotcrete

a) Materials –

The following basic materials -- cement, aggregates and water -- should be essentially the same as for concrete. The ACI 506-2 gradations are shown in Table 4-7 and plotted in Figure 4-23.

Table 4-7 --- ACI 506-2 Gradations

Sieve Size U.S. Standard Square Mesh	Percentage by weight passing Individual Sieves		
	No. 1	No. 2	No. 3
¾ in. (19 mm)	--		100
½ in. (12 mm)	--	100	80-95
3/8 in. (10 mm)	100	90-100	70-90
No. 4 (4.75 mm)	95-100	70-85	50-70
No. 8 (2.4 mm)	80-100	50-70	35-55
No. 16 (1.2 mm)	50-85	35-55	20-40
No. 30 (600 μ)	25-60	20-35	10-30
No. 50 (300 μ)	10-30	8-20	5-17
No. 100 (150 μ)	2-10	2-10	2-10

The following materials – accelerators, steel fibers and silica fume – give shotcrete its necessary special properties:

I. Accelerators for Mixes without Micro silica – should vary from 2% to 8% (by weight of cement), with about 5% on the arch. Additional layers will require less accelerator because of the better surface to be shot and lessened surface moisture.

   Accelerators for Mixes with Micro silica -- the percentages given above should be reduced substantially; more than 2% is unlikely to be needed on the arch.

   A good concentrated reference source for shotcrete is the series of conference proceedings of the Engineering Foundation (1973, 1976, 1978, 1982, 1990, 1993 and 1995).

II. Steel Fibers – consisting of short, thin pieces of wire, or sheet steel, should be incorporated into the mix to meet the need for ductility, toughness, and residual strength.

   Steel fiber should not be specified by the number of pounds per cubic yard because of the major difference in engineering properties between the types. Rather, a performance specification stipulating ductility (toughness) and residual strength requirements should be used.

III. Micro silica (Silica Fume) – should be used to increase adhesion, reduce permeability, reduce amount of required accelerator and, for dry-mix shotcrete, reduce rebound and dust when gunning. Replacement percentage should vary between 8 and 13%; a greater percentage would increase shrinkage, and therefore, cracking. Principal requirements for Micro silica should be in accordance with ASTM C1240).

IV. Other Additives – Air entrainment should be added to wet mixes when freeze-thaw cycling is anticipated. Considerable air is lost during gunning, sometimes on the order of 60% from the pump to the wall.

b) Engineering Properties –

Compressive Strengths – Except for special situations, only one strength of shotcrete should be used on a project; when the shotcrete will not be highly stressed, 4,000 psi (27,600 kN/m^2) should suffice.

When early strength is necessary for initial tunnel stabilization, compressive Strength should be specified at 700 psi (4,826 kN/m^2) in 8 hours, along with a 3-day strength which will vary depending on required 28-day strength.

Adhesion and Shear Strength – It should be noted that these parameters are of greater importance than compressive strength. The surfaces shot are rarely smooth enough that adhesion is acting alone; but, a well-designed mix should produce adhesion on the order of 180 psi (1,241 kN/m^2).

Bond Strength – In shotcrete, this is the bond between successive shotcrete layers (as opposed to concrete, where it is the bond with rebar) to ensure that all layers act integrally strength-wise. Bond strength should be in accordance with ACI 506R; when measured in shear, it should vary from 8 to 12% of the compressive strength of dry mix, but only about half as much for a wet mix.

Flexural Strength – For plain shotcrete, the flexural strength between 10 and 28 days is about 15 to 20% of the compressive strength. The designer should also consider qualitatively the fact that fresh shotcrete is more ductile at an early age and will creep, thereby relieving stress.

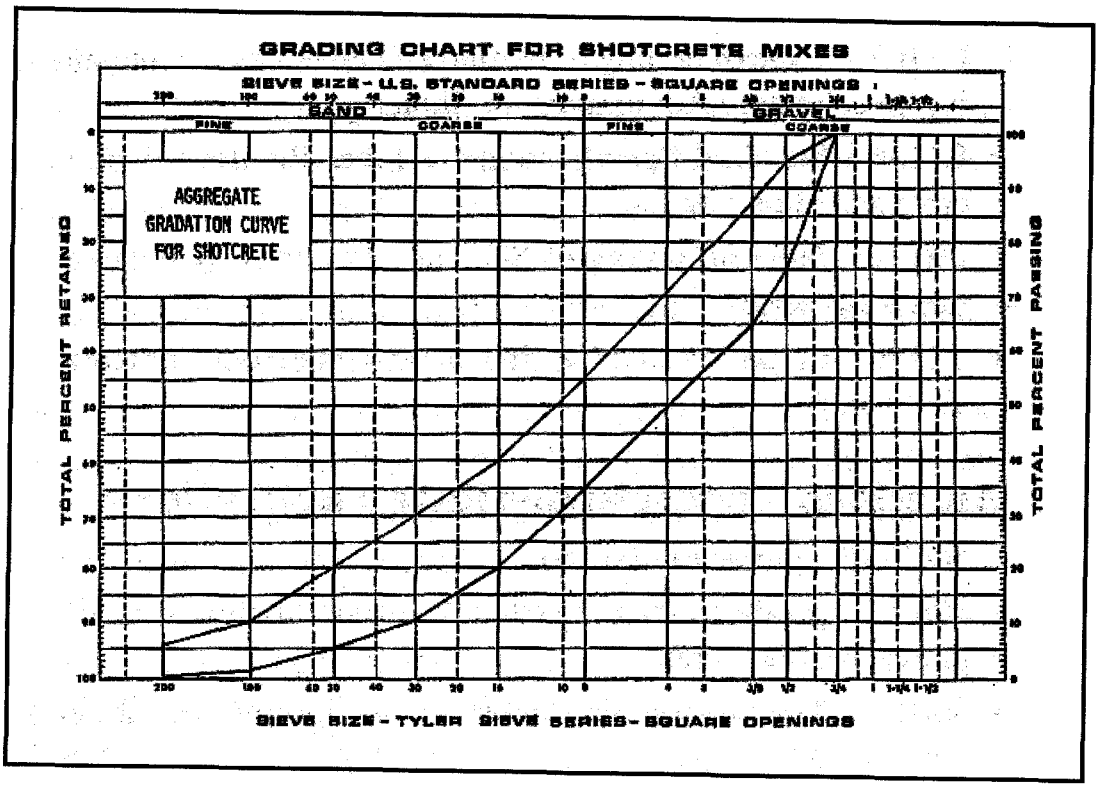

Fig. 4-23 Grading Chart for Shotcrete Mixes

Ductility – The ability to incur large deformation without rupture is obtained by the use of fiber reinforcement. Flexural strength and residual strength should be specification items.

Impermeability – Greater impermeability should be obtained by:

- Avoiding excessively cement-rich mixes (to minimize shrinkage cracking);
- Using fiber (to minimize and distribute opening of shrinkage cracks);
- Using more finely-ground cements;
- Adding silica fume;
- Careful control of nozzle distance and attitude (promotes maximum density in the in-place concrete).

c) Testing –

Shotcrete placed for the Contractor's convenience should be his sole responsibility and testing should not be required by the designer. Shotcrete testing should be a three-part process, as follows:

1. Compatibility Testing – should be required before proposed materials and sources are approved. ASTM C1102 should be followed with regards to cement-accelerator compatibility. Proposed mixes should be prepared, cured and tested in the laboratory.
2. Field Trials – should follow upon completion of compatibility testing, and, after curing in the manner proposed for the production work, cores and beams should be taken and tested.
3. Production Testing – should be done in three parts:
   - The field trial process should be repeated at the heading during production shotcreting, upon demand by the engineer;
   - Cores should be taken from the in-place shotcrete, at specified intervals, to check thickness, adhesion, and compressive strength;
   - Visual check and sounding at frequent intervals, with cores removed and tested at suspect locations.

   Special Tests – When a high degree of impermeability is required, the mix design effectiveness should be tested according to ASTM C642 using a maximum boiling absorption value of 6%.

   Flexural toughness of fiber-impregnated shotcrete

should be determined from a plot of the load-deflection curve data obtained by ASTM Standard Test Method C1018-89 for a test beam.

d) Design Considerations –

Design philosophies and procedures have been discussed in Sections 4-4 through 4-7. Some design considerations are presented below:

- In rock tunnels, shotcrete should be used with rock bolts to provide rock reinforcement; except when impermeability is the prime consideration, protection of the ground against dehydration, and in competent rock where good adhesion can be assured; when shotcrete may be used alone.
- When dowels provide anchorage and the shotcrete is primarily planar, adhesion to the rock and the composite rock-shotcrete beam action should be considered, in addition to the shotcrete being designed as cantilevering from an anchor support, as a plate supported by four corner anchors, etc.
- Thin shotcrete arches should be considered to have substantial carrying capacity because the ground constraint eliminates flexural stresses and also because significant irregular roughness in the excavated perimeter increases capacity.
- Shotcrete should not be used alone for flat roofs.
- Shotcrete can be used in many soft ground conditions. For example, in firm clay, although loaded to near its confined capacity, the re-confinement produced by an early ring of shotcrete should enable it regain essentially all the original capacity.
- The individual drifts in a NATM tunnel in difficult ground can be reduced in size until a reasonable amount of shotcrete provides stable opening. The openings can then be enlarged or combined by applying additional shotcrete immediately after the larger opening is formed, resulting in quick, thick shotcrete arches and walls and in a completed tunnel.
- Shotcrete should not be used in squeezing and swelling ground conditions until long rock bolts and time have stabilized the ground.

4-9 Immersed Tunnels

a) Structural Design of Immersed Tunnels –

a.1) General –

There are no special codes for immersed tunnels; standard codes of highway structures should apply. Reference should be made to the State-of-the-Art Report by the ITA Working Group No. 11; "Immersed and Floating Tunnels" (1997).

Definition -- An immersed tunnel consists of prefabricated tunnel elements that are floated to the site, where they are installed and connected to one another under water, in a dredged trench, between terminal structures constructed in the dry.

Steel (Shell) Tunnels -- A circular-shaped section should be used for a single tube (see Fig. 4-24) and a binocular shape should be used for a double-tube cross section (see Fig. 4-25) in order to achieve the greatest economy for external pressure loading, as most sections of the structural ring or rings are in compression at all times.

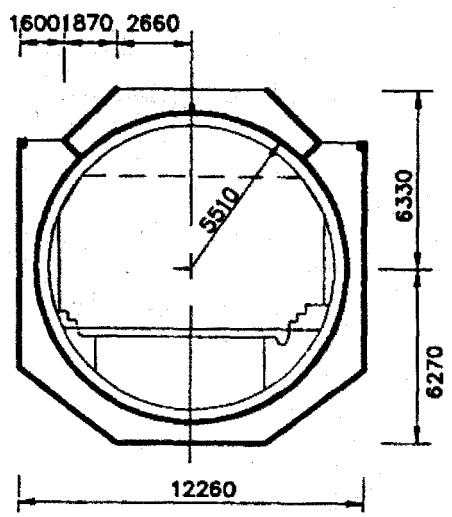

Fig. 4-24 - Double Steel Shell, Single Tube Tunnel (The Second Hampton Roads Tunnel, 1976)
[*1000mm = 3.28 ft*]

The vehicular tunnel should be a "Double-Steel-Shell" structure, consisting of a circular steel shell stiffened with steel diaphragms, with a reinforced concrete ring installed inside the shell and tied to the shell, which acts composite with the shell and the diaphragms; welded to the exterior flange plates of the diaphragms is a second shell, the form plate, which acts as a container for the

ballast concrete, partly placed as tremie. The ballast weight provides the required negative buoyancy.

In binocular double-steel shell tunnels, the sump should be placed between the tubes.

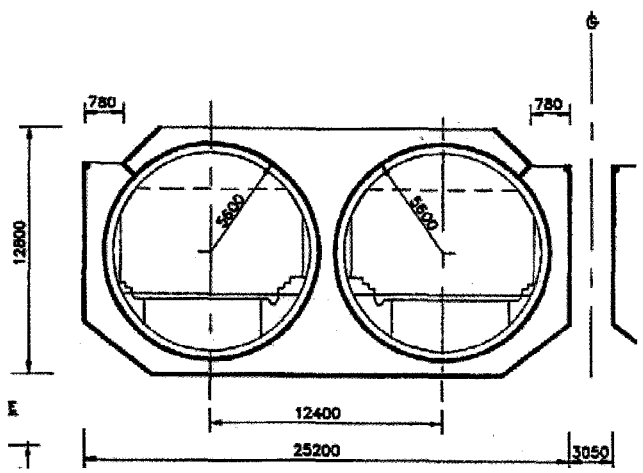

Fig. 4-25 - Double Steel Shell, Double Tube Tunnel (Fort McHenry Tunnel, Baltimore, 1984)
[1000mm = 3.28 ft]

Concrete Tunnels -- The rectangular box shape should be used for double and multiple-tube concrete traffic tunnels, and may have to be widened with extra cells for ventilation air supply and services (see Fig. 4-26). The box shape best approaches the rectangular internal clearance required for motor traffic and also permits practical concrete construction practice.

In concrete tunnels, the sumps should be placed beneath the roadway.

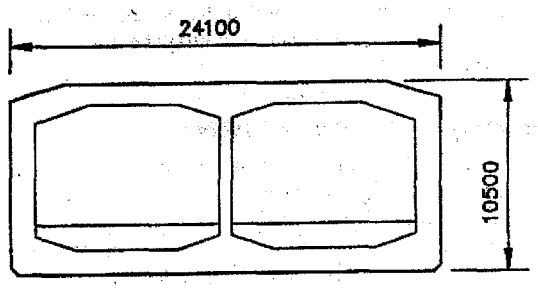

Fig. 4-26 – Conwy Tunnel, Wales
[1000mm = 3.28 ft]

a.2) Watertightness –

The design of any immersed tunnel should consider the consequences of incidental small leakage from the presence of an undetected pinhole in a steel weld, or undetected construction imperfection of the concrete or waterproofing membrane; suitable repair methods, including provision of proper drainage into the tunnel drainage system, should be specified in the design.

Steel Shell Tunnels – Watertightness should be provided by the steel shell itself, and should rely on the quality of the large number of welds;

Concrete Tunnels -- Development of construction cracks should be avoided by using one of the following processes; i) low shrinkage concrete mix design; or ii) forced cooling in the lower part of the walls (sometimes in combination with insulation and heating of the base slabs).

Two basic concepts should be considered for control of leakage in concrete tunnels –

1. The '*expansion joint concept*' – involves avoiding longitudinal stresses that can cause cracks, thereby relying on the watertightness of the uncracked concrete, or;
2. The '*waterproofing membrane concept*' – involves enveloping the concrete tunnel element in a waterproofing membrane.

Both concepts are discussed in detail in the ITA State-of-the-Art Report (1997).

a.3) Design of Typical Tunnel Section

Interior Geometry – As discussed in Section 4-1 and 4-2, interior geometry should depend largely on local, state or national highway design standards applicable to the type and volume of traffic for which the tunnel is designed, and should include consideration of drainage, superelevation and sight distance for horizontal and vertical curvature.

Typical Cross-section; Double-Steel Shell Tunnel – The main structural element should consist of an interior steel shell plate made composite with the reinforced concrete ring within it. The exterior steel, the 'form plate', should envelope the interior shell in an octagonal shape up to the elevation of the crown of the interior shells, as shown in Figure 4-27. The shell and form plate are interconnected by steel plate diaphragms at 13- to 16-ft (4- to 5-m) centers. Exterior concrete should fill the space between the shell and the form plate and should completely cover the shell plate.

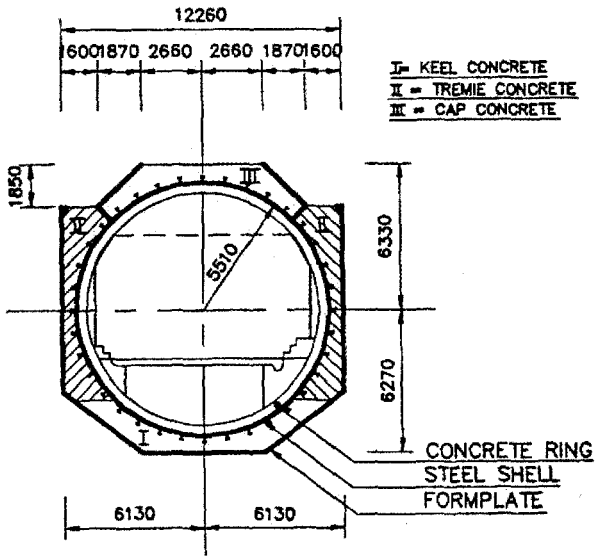

Fig. 4-27 – Typical Cross-section; Double-Steel Shell Tunnel
[*1000mm = 3.28 ft*]

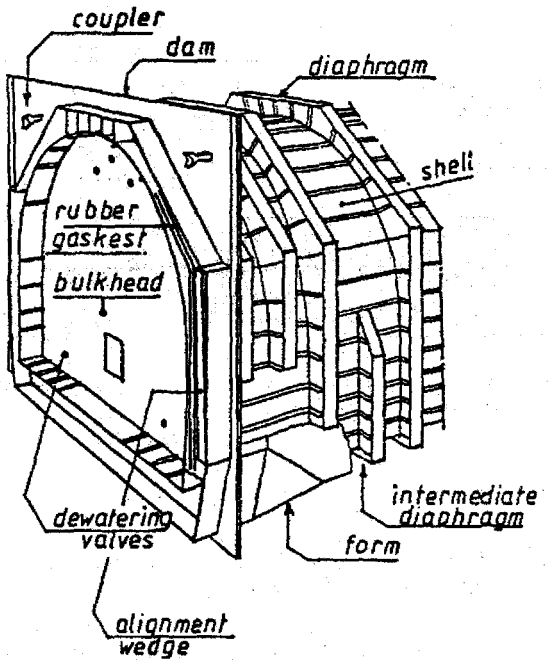

Fig. 4-28 – Double-Steel Shell Element, Detail and Typical Structural Arrangement

Typical Cross-Section; Concrete Tunnel – is usually rectangular, and should be considered as a monolithic frame comprising base, walls, and roof, with a horizontal construction joint between the base and walls. Water stops can be provided in the construction joints in cases where they don't obstruct easy placing and compaction of the concrete.

Weight Balance – Design of the cross-sectional geometry should consider: i) variations in density of the water and the construction materials; ii) dimensional inaccuracies; iii) weights of temporary equipment needed for transportation, temporary installation and the permanent condition.

A concrete tunnel element should be able to float with all temporary immersion equipment on board, and the freeboard should be minimal to reduce the amount of permanent and temporary ballasting. The temporary on-bottom weight, with the water ballast tank filled, should be sufficient. For the permanent condition, it should be guaranteed safe against uplift with the fixed ballast in place.

The minimum factor of safety for the permanent condition of immersed tunnels should be 1.10, based on the following factors used to determine required geometry; the actual safety factor should depend on actual as-built dimensions:

1. *Uplift Forces* – i) Buoyancy by the water at the maximum expected density and according to the theoretical displacement; ii) Hydraulic lag, if applicable, in tidal waters;
2. *Stabilizing Loads* – i) The theoretical weight of the structural steel, concrete and reinforcement steel, assuming a realistic density for the concrete that will not exceed the actual density; ii) The fixed permanent ballast concrete, inside or outside; iii) weight of protective membranes and cover concrete; iii) the roadway pavement, or suspended roadway slabs;
3. *Other Factors* not considered as stabilizing, including: i) backfill surcharge and downward friction; and ii) weight of mechanical equipment and suspended ceilings.

The minimum temporary safety factor during installation should be 1.03 after release of the immersion equipment.

Steel Shell Tunnels – the total amount of concrete needed for the weight balance amply exceeds that required for strength; the external ballast concrete is the variable factor for the weight balance.

Concrete Tunnels – The thickness of the structural concrete is usually sufficient for strength; determination of the final geometry is more complicated, because the ballast concrete is on the inside and variation of the internal ballast volume affects the internal geometry.

Longitudinal Articulation and Joints – Being rigid structures in the longitudinal direction, the stresses with which immersed tunnels would respond to axial tensile strain (temperature) and longitudinal bending strain (unequal settlement or large surcharge discontinuities) depend on the material properties and the longitudinal articulation.

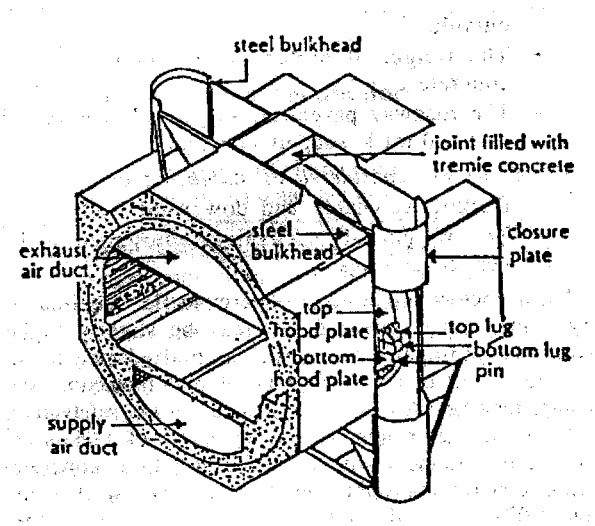

Fig. 4-29 – Typical Tremie Concrete Joint for a Double-Steel-Shell Tunnel

Greater detail on longitudinal articulation and joints, including: shear transfer in intermediate joints, intermediate flexible rubber joint design, expansion joints, and final joints for concrete tunnels, are given in the ITA's State-of-the-Art Report (1997).

a.4) Structural Analysis; Concrete Tunnels

1. Transverse Analysis -- a rectangular concrete tunnel should be treated as a series of plane frames. When the loads and soil reactions are constant, or vary gradually in the longitudinal direction, the frames should be analyzed with balanced loads (except in areas of heavy surcharge, near discontinuities of surcharge, and in areas of expected redistribution of soil reactions; where the shear forces between adjacent frames need to be analyzed).

In numerical analyses, it is practical to model an elastic foundation for the base, with a given spring constant. For soft soil, the effect on transverse moment distribution is equal to a uniform ground pressure distribution; for hard soil, the sensitivity to the spring constant should be investigated, as the spring constant may vary with time.

2. Longitudinal Analysis – The relatively low tensile strength capacity of concrete and the desire to avoid transverse cracks, makes it important to understand longitudinal performance of concrete tunnels.

The effects of hydrostatic compression, temperature stresses and longitudinal bending on the longitudinal concrete stresses are explained in ITA's State-of-the-Art Report (1997). Also discussed, are: the effects of temporary construction loads; longitudinal reinforcement; and permanent longitudinal prestress.

a.5) Structural Analysis; Double-Steel-Shell Tunnels

Unlike concrete tunnels which are cast in a basin, floated, and then placed and backfilled without much change in the basic structural section; the fabrication of steel shell elements involves a structure that undergoes a series of stages, each involving a basically different structure. For double tube shells, the structural stages are as follows:

Stage 1 – Fabrication and launching;

Stage 2 – Internal outfitting with concrete;

Stage 3 – Final condition after backfilling in place.

These stages are described in detail in ITA's State-of-the-Art Report (1997), along with a discussion on field measurements.

a.6) Loadings

Loading Combinations and Allowable Stress Increments – An indication of type of loads and their combinations used for the design of immersed elements is given in Table 4-8, based on non-exhaustive data from the USA, Japan and the Netherlands. The factors given in the table are based entirely on specific project conditions and requirements and relate to tunnels of widely differing structural nature. The reference projects used in the table are:

I: Steel Shell Traffic Tunnel (Ted Williams Tunnel, Boston)

IIa: A longitudinally prestressed reinforced concrete traffic tunnel with waterproofing membrane (Tama River Tunnel, Japan)

IIb: A reinforced concrete railway tunnel with waterproofing membrane (Keyo-Line Daiba Tunnel, Japan);

III: A typical Dutch reinforced concrete traffic tunnel

(Tunnel De Noord).

For reference II, only the ultimate-limit state factors are given. However, service-limit state verification is also done in view of watertightness requirements.

Accidental Loads – Structural design should consider the following relevant loads:

1. *Sunken Ship Loads* – Immersed tunnels in soft ground will respond more rigidly than the adjacent backfill; this should be accounted for in the load to be specified (uniform load over a minimum area). For example, the specification for an immersed tunnel in the Great Belt in Denmark used by very large vessels, was 14.5 psi (100 kN/m^2) over 2,700 ft^2 (250 m^2).
2. *Dropping and Dragging Anchors* – The energy of a free falling object in water is absorbed by the stone cover and partly by the crushing of the concrete cover layer of the immersed tunnel. The structural roof load is related to the impact pattern, which, usually, can be accommodated without additional reinforcement. The lateral load of a dragging anchor hooking behind the edge of the tunnel roof should be derived from the effective anchor breaking loads, in the range of 337 tons (3,000 kN) for large vessels, and acting as low as 13 ft (4 m) below the roof top; depending on the type of bottom material or anchor.
3. *Flooding of Tunnels* – should be investigated in the light of possible undesirable settlements.
4. *Internal Explosion Loads* – should depend on tunnel use; and may substantially increase the amount of transverse reinforcement needed.

Guidelines for accidental loads associated with tunnel operations are discussed in Section *d) Hazard Analysis*.

a.7) Typical Material Specifications --

Structural Concrete for Concrete Tunnels – There are two main groups of specifications: Group One uses sulphate-resisting cement or Portland cement to which pulverized fly ash (p.f.a.) has been added; Group Two uses lower-grade concrete, with emphasis on construction crack avoidance, low permeability and chloride penetration resistance, with watertight membranes not being used. The Netherlands is typical of Group Two.

A typical concrete specification for Dutch immersed tunnels is:

Characteristic Strength:	3,300 psi (22.5 Mpa).
Cement Types:	Dutch Blast Furnace Cement (more than 65% Slag)
Max. Cement Content:	465 lb/yd^3 (275 kg/m^3)
Max. Water/Cement Ratio:	0.5
Permeability:	Less than 20 mm in penetration test, according to DIN 1048.

Typical material specifications for structural concrete and structural steel, as presently used in the USA, are:

Structural Concrete:

Strength:	4,000 psi (27.5 Mpa) (also for tremie concrete)
Cement:	Portland Cement: AASHTO M85, Type I or II
Cement Content:	565-610 lb/yd^3 (335-362 kg/m^3)
Water/Cement Ratio:	0.48-0.50, depending on size of aggregate
Slump	2 in. – 5 in. (50mm – 125mm)
Permeability:	2,000 coulombs per 6 hours, where tested per AASHTO T-277
Fly Ash	will be substituted for 5% of the cement for all concrete.
Structural Steel:	ASTM Grade A 36 (mild steel with 36,000 psi yp)
Reinforcing Steel:	AASHTO M31 Grade 60 (60,000 psi yp).

Table 4-8 – Indication of Allowable Stress Increments or Load Factors for Loading Combinations

Stress Increments (S) or Load Factor (F)	Type of Structure		
	I (S): Steel shell traffic tunnel (U.S.A.)	II (S): Reinforced concrete tunnel with waterproofing membrane (Japan)	III (F): Reinforced concrete traffic tunnel (Netherlands)
A. BASE LOADING Unfavorable combination of: • Dead load • Backfill • Surcharge and live load • Lateral earth pressure • Water pressure at mean high or low water	1.00	1.00	1.5 *
B. TOTAL STRESS INCREMENT FOR COMBINATION OF BASE LOADING WITH ANY OF THE FOLLOWING:			
B1. Extreme high water	1.25		1.5 ***
B2. Anchor dragging or dropping	1.25		
B3. Sunken ship load	1.25		
B4 Temperature restraints	—		
B5. Unequal settlements	—	1.00 1.30 **	—
B6. Temperature restraints and unequal settlements	—	1.15	—
B7. Internal explosion	—		1.0
B8. Earthquake, unequal settlement	—	1.50	—
B9. Earthquake, temperature restraints, unequal settlements	—	1.65	—
B10. Erection condition	—	1.30	

NOTE: A dash indicates that this aspect is known not to be reviewed, or is not critical.
* Refers to Dutch practice: the load factor used for the ultimate limit state is 1.7, reduced for the material factor incorporated.
** The factor 1.30 also includes extremely high water.
*** 1.4 * A + 1.15 * B1.

b) Waterproofing and Maintenance –

b.1) General –

For both concrete and steel tunnels, the watertightness and the continuity of the joints between the tunnel elements should be considered critical. The joints should allow some movement without leakage or any other detrimental effect on the functioning of the tunnel.

As the awareness of seismic exposure increases, the joints in a tunnel should increasingly be designed to carry high seismic shears, and should be restrained positively against excessive opening. Axial motions should be restrained by using stressed or unstressed post-tensioning across the joints, while vertical shears should often be carried by steel shear keys stressed onto the concrete and fitted with bearings.

There are two basic watertightness design philosophies for concrete tunnels: the first makes use of applied exterior steel and/or a waterproofing membrane. The second uses no exterior waterproofing layer, but rather accomplishes waterproofing by dividing the element into separate segments where concrete shrinkage-

cracking can be prevented.

Being completely enclosed by a steel shell, for steel tubes, the issue of waterproofing largely concerns the design of the joint between elements, and corrosion of the steel.

b.2) Steel Tunnels –

For the Ted Williams Tunnel in Boston, the design of the gasketted joint was revised to accomplish two objectives:

1. Make the joint flexible, to prevent damage to the seal resulting from motions observed on similar tunnels, and;
2. Provide a controlled location for the movement in the joint to appear in the surface of the wall.

This flexible joint detail (Fig. 4-30) is used in a steel tunnel for the first time in the USA, and is very similar to that commonly used in Europe for concrete tunnels. Typical joints and contingency method for sealing them are discussed in ITA (1997).

b.3) Concrete Tunnels –

Alternatives to the steel shell were developed in Europe because steel is expensive. Problems have occurred because the concrete was not watertight due to cracks and lack of density.

Leakage water can enter the tunnel in two ways:

- Through the concrete structure;
- Through the joints.

These types of leakage are discussed in detail in ITA (1997).

b.3) Maintenance –

Leakage in Steel Tunnels – watertightness in steel tunnels depends primarily on the care with which the integrity of the steel shell is maintained through design and fabrication. Therefore, tunnel specifications should require suitable welder qualifications, as well as radiographic, ultrasonic, and dye penetration methods of weld inspection and tests for watertightness during fabrication.

Permanent penetrations of the shell should be avoided whenever possible in the design. Where openings are provided for access or concrete placement, great care should be taken to inspect and test welds of the closure plates for watertightness.

While rare, a leakage problem when it occurs, most often occurs at the terminal joints with the land section, at the transition from a totally enclosing steel shell to a conventional externally applied structural waterproofing system. Furthermore, it may be difficult to keep the excavation area dry where the waterproofing is being installed; hence proper detailing at this interface is critical.

b.4) Leakage in Concrete Tunnels –

Leakages have mostly concerned minor leakage through the floor, walls and roof. In tunnels with membranes, leakage through cracks in the floor or walls is difficult to repair because it is almost impossible to find where the corresponding leak in the membrane is located. In such cases, the leakage is stopped by injecting all cracks, in the absence of water flow.

c) Environmental Issues –

This section identifies specific aspects of immersed tunnel design and construction that commonly cause environmental concern and gives recommendations for good practice. It neither comments on procedural matters nor addresses the broader issue of environmentally sustainable transport policy.

c.1) Effects on Watercourses –

- Changes in flow patterns and patterns of scour and siltation; pollution of the water course; and effects on aquatic life; should all be considered during the conceptual planning process.
- Planners should begin collecting data on behavior of the watercourse as soon as the possibility of an immersed tunnel crossing is established;
- Problems associated with currents, tides, variations in salinity, sediment transport, scour and siltation should be considered; hydraulic studies, including numerical rather than physical modeling, should be performed;
- Contracts should be drafted to strike a balance between control and cost of disposal of dredged material.

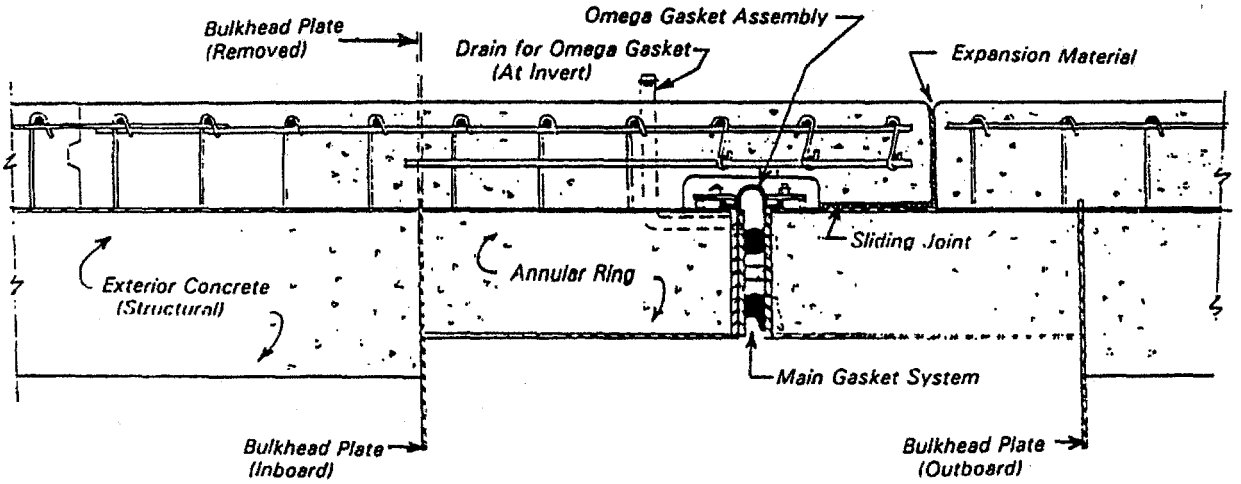

Fig. 4-30 – Typical Joint Detail for Boston's Ted Williams Tunnel (ITA, 1997)

c.2) Effects on the Groundwater Regime –

- Construction usually involves large-scale groundwater lowering to construct approach cuttings; and to create a tunnel element graving dock. Use of existing dry docks or steel fabrication yards should be considered for tunnel element construction, whenever possible.
- Potential problems to groundwater used for drinking (including depletion, contamination and saline intrusion) should be considered;
- Potential problems from contaminated ground water (including migration of polluted ground water and disposal of extracted ground water) should be considered;
- Troublesome effects from groundwater lowering (including settlement of nearby buildings) and appropriate mitigative measures (such as use of cut-off walls; selective recirculation of groundwater; reduction of the need to dewater, by dewatering in stages or modifying the permanent works) should be considered;
- Decommissioning of the dewatering system should be controlled to prevent saline intrusion, etc.

c.3) Disposal of Excavated Material –

- When disposal of large volumes of material is necessary as a result of dredging and/or large dry excavation for approach structures, disposal should be effected in an environmentally-sensitive manner.
- Contractor should be given reasonable freedom where dredging spoil is expected to be uncontaminated;
- Sufficient site investigations should be performed at the pre-contract stage, where dredging is expected to encounter contaminated material, to determine type and extent of the material.

c.4) Land Use Consequences

- While construction can be environmentally damaging (for example, loss of shore habitats), immersed tunneling can also afford opportunities for land use improvements at little additional cost. This should be included in a scheme to balance excavation quantities with fill;
- Planners should know about all current and planned land uses;

d) Hazard Analysis; Accidental Loads –

The after-effects of selected major accidents on immersed tunnel structures are discussed in this section. Design requirements with regards to Life Safety, Fire and Explosion are presented in Section 4-16.

d.1) Internal Flooding –

- Immersed tunnels should be designed to maintain integrity for accidental internal flooding;
- Internal components should be designed to resist the resulting loads at ultimate strength (in the transverse direction, after flooding, external walls or slabs would lose pressure due to external hydrostatic loading; the reverse would be true for an internal wall or slab).
- The increased weight of the tunnel, because of the water it contains, may cause settlement and damage to the joints between the tunnel elements, especially at the terminal joints. The possibility for repair should be allowed for in the design.

d.2) Sunken Ship Loading –

- The possibility of a major ship sinking or stranding on an immersed tunnel should be considered in the design as an accidental load. Large crude oil tankers are not considered because they do not easily sink. The characteristics of the two reference ships are given in Table 4-9. Calculations for a large bulk carrier and a large freighter are given in Table 4-10.
- The tunnel structure should resist the load with a load factor of unity, just meeting the ultimate structural resistance.
- Safe design criteria for this type of event should be derived by combining a proper understanding of the mechanics involved (see ITA, 1997) with knowledge of specific project conditions.
- When appropriate, consideration should be given to deriving equivalent loads directly from a worst-case event, and/or performing a probability analysis based on survival criteria.

Table 4-9 -- Characteristics of Reference Ships (ITA, 1997)

Reference Ship Parameters	Large Bulk Carrier	Large Freighter
Deadweight (DWT) in tons	70,000	15,000
Length b.p (l) in m	215	150
Beam (b) in m	32.2	20.0
Hull depth (h) in m	19.0	13.5
Design draft (d) in m	13.0	9.5
Block coefficient	0.9	0.7
Self weight (W_{ship}) in tons	11,500	5,000
Displacement (B_0) in tons	81,500	20,000
Number of compartments	8	6
Flat keel area (A) in m^2	5,000	1,800

Table 4-10 -- Theoretical Ground Load Calculations (ITA, 1997)

	Large Bulk Carrier	Large Freighter
$V_{empty\ ship}$ = W_{ship} x (70-10)/70	100,000 kN	43,000 kN
$q_{e,\ empty\ ship}$ = V/A	20 kN/m^2	24 kN/m^2
$V_{c,}$ "normal cargo"	-	-
$V_{c,\ iron\ ore}$:0.9 x 700,000 (30-10)/30	420,000 kN	n.a.
$V_{c,\ steel}$:0.9 x 15,000 (70-10)/70	n.a.	115,700 kN
q_c = V_c/A	83 kN/m^2	64 kN/m^2
Total Ground Pressure (q_e + q_c) 'normal cargo"	20 kN/m^2	24 kN/m^2
Total Ground Pressure "heavy cargo"	103 kN/m^2	88 kN/m^2

- The designer should consider exceptions to survival of accidental loading effects from ship grounding events by immersed tunnels; these exceptions include:
  1. A ship grounded perpendicular to the tunnel and straddling over it when the top of the tunnel cover is protruding above the bed of the waterway;
  2. A large bulk carrier grounded parallel to and on top of a tunnel over a long concave section of the bed;
  3. Nearly all modes of grounding with maximum internal flooding of large bulk carriers fully loaded with iron ore.

  It is difficult to design for these exceptions as accidental loads; a probability analysis should be considered, but only for the probability of grounding and the probable extent of aggravating conditions such as flooding, and also for the likelihood of timely salvage operations to prevent aggravation of the condition.

d.3) Dropping Anchors –

Roof protection, with appropriate reinforcement, should be provided to prevent structural damage to the tunnel from dropping anchors.

The terminal velocity for the anchor (of mass, M) should be calculated, and has been demonstrated by tests to be about 7 m/s.

Anchor terminal impact energy, $E = \frac{1}{2} Mv^2$

$= 24.5$ M kN.m

Where M is in tons

Impact loads directly on the concrete, and impact load with granular roof protection layer are discussed in ITA (1997).

d.4) Dragging Anchors –

Without appropriate provisions of cover to the roof of an immersed tunnel, a dragging anchor might engage the side of the tunnel structure; appropriate provisions should be made to prevent such an occurrence, releasing the anchor to the surface before it reaches the tunnel. Precautions to be considered should include the following:

- Rock berms provided along each side of the tunnel roof, to lift the anchor chain and release the anchor to the surface by choking the gape of the anchor;
- Use of a rock layer on top of the roof and extending beyond the sides of the tunnel over a distance of 10 to 15 m, with the top of the layer being level with the bed of the waterway;
- Use of stone asphalt mats with thickness in the range of 0.6 to 0.8 m, instead of a relatively thick rock layer.

Additional precautions to be considered include provision of large chamfered edges to the roof to assist anchors in riding up; and, for concrete tunnels, provision of a non-structural protective concrete layer of about 100 to 150 mm thick.

e) Transportation of Tunnel Elements –

One of the advantages of an immersed tunnel method over tunneling methods is prefabrication in sections in a controlled shipyard or casting basin environment; this facility could be far away from the actual tunnel site.

The design should include requirements for transporting tunnel elements over bodies of water, including the

open ocean. Consideration should be given to the following:

1. Most tunnel elements are blunt-ended, resulting in slow towing speeds and difficult maneuverability;
2. There is no redundancy in flotation to protect the element from sinking if the hull is breached or cracks; furthermore, freeboard is as low as 4 in (100 mm) for some concrete elements, leaving them little spare floating capacity;
3. More severe loading cases can apply during transportation than permanent loads (differential and external loads). The design of the element and provisions for the method of transport should take into account load cases during transport resulting from factors, such as:
   - Weight of the end bulkheads;
   - Equipment mounted on the element for placing;
   - Temporary mounting or support of the element during transport;
   - Offshore wave height and period;
   - Structural staging of the element at the time of transport.

Details on: transportation route; preparation for transport; internal forces during transport; towing forces; nautical aspects; hydraulic model tests; transportation by barge, and; examples of inland and offshore transportation ; are provided in ITA (1997).

4-10 Cut-and-Cover Tunnel Structures

a) Tunnel Design – Structural

a.1) General –

The cut-and-cover structure should be designed to safely resist all loads expected over its life; the principal loads are: long-term development of water and earth pressures; dead load, including weight of earth cover; surface surcharge load; and live load. Load categories should be in accordance with AASHTO Standard Specifications, and should represent the requirements of the particular cut-and-cover structure under consideration. Earthquake forces are discussed in 4-11.

a.2) Dead Load

Dead load should consist of the following:

1. Weight of the basic structure;
2. Weight of secondary elements permanently supported by the structure;
3. Weight of the earth cover supported by the roof of the structure and acting as a simple gravity load.
4. In order to factor in future loadings over shallow vehicular tunnels (e.g., special vehicle loadings in excess of normal axle loads, and future building loads, etc.), the structure should be designed for a minimum vertical load equivalent to 8 ft (2.45m) of earth cover, regardless of actual cover.

a.3) Live Load, Impact and Other Dynamic Forces –

Live load, impact and other dynamic forces imparted to cut-and-cover vehicular tunnels and their application, should conform to, or exceed, the requirements contained in the AASHTO specifications for HS20-44 loading.

a.4) Horizontal Earth Pressure –

Horizontal earth pressure, lateral pressure due to both retained soil and retained water in soil when water is present, may include the effect of surcharge loading resulting form adjacent building foundation loading, surface traffic loading, or other surface live loading. All of these components should be evaluated both in terms of present and future conditions, particularly groundwater levels.

When future changes could adversely affect the subsurface structure, needed protective measures to mitigate adverse effects might not be foreseen, and might be extremely costly to add to an existing structure.

The short-term and long-term changes in horizontal earth pressure should be considered, and cut-and-cover tunnels should be designed for both short-term and long-term loading. Immediately following construction, the actual short-term earth pressure may be considerably less than long-term design pressure.

To provide a competent factor of safety against future mishap resulting from adjacent construction, the tunnels should be proportioned for side sway, if a single-story structure; and side sway should be considered in the upper story only, in the case of two or more stories.

a.5) Buoyancy –

When the groundwater table lies above the bottom of the invert or base slab of a subsurface structure, an upward pressure on the bottom of the base slab, equal to the piezometric head at that level, should be accounted for.

When B (the buoyant force per lineal feet of structure) exceeds DL min. (the reliable minimum weight of the structure plus the fill above the structure), other resisting features should be incorporated into the design, including the following:

- The weight of the structure may be increased by thickening the walls, roof or base slab; the base slab may also be widened to increase the weight

of earth resistance;

- Tension piles designed to provide a tensile force on the base slab should be provided; both steel piles and precast concrete piles have been used in this application;
- Tie-down anchors, resembling permanent tie-back anchors, should be provided; drilling for the anchors is accomplished at some convenient time after the base slab is placed. The anchor heads are located in formed recesses in the base slab. After completion of the tie-down installation, the recess is filled with concrete. The type of anchor used will depend in part on whether the anchor can be founded in bedrock beneath the structure, or in competent soil.

a.5) Flood –

Where a potential for river floods, or other flooding that could add loads to subsurface structures, the design for the structures should allow for this loading, as required by the particular type of structure and the conditions affecting each location.

a.6) Shrinkage and Thermal Forces –

Shrinkage forces and thermal forces between transverse joints should be accounted for by the longitudinal reinforcement in the walls, roof, and invert slab; the stresses produced by these forces should not enter into frame analysis of the structure (as they are typically normal to the principal stresses caused by DL, LL, and I).

a.7) Loading Cases –

The particular load cases to be analyzed should depend on the type of structure, its location, the type of ground in which the structure is founded, location of the groundwater table, and other local factors.

All reasonable foreseeable temporary and permanent loading cases that would affect the design of the structure should be investigated.

a.8) Frame Analysis –

Loads and pressures representing each loading case are applied, and the shears, thrusts and bending moments for each element of the frame are determined through rigid frame analysis using commonly accepted methodology (usually contained in structural analysis computer programs).

Except for particularly wide invert spans, it should be assumed that the vertical reactions are uniformly distributed over the bottom of the invert slab, conservatively resulting in maximum slab bending moments.

Figures 4-31a and 4-31b contain illustrations of three loading cases applied to a reinforced concrete structure and the configuration of each resulting bending moment diagram.

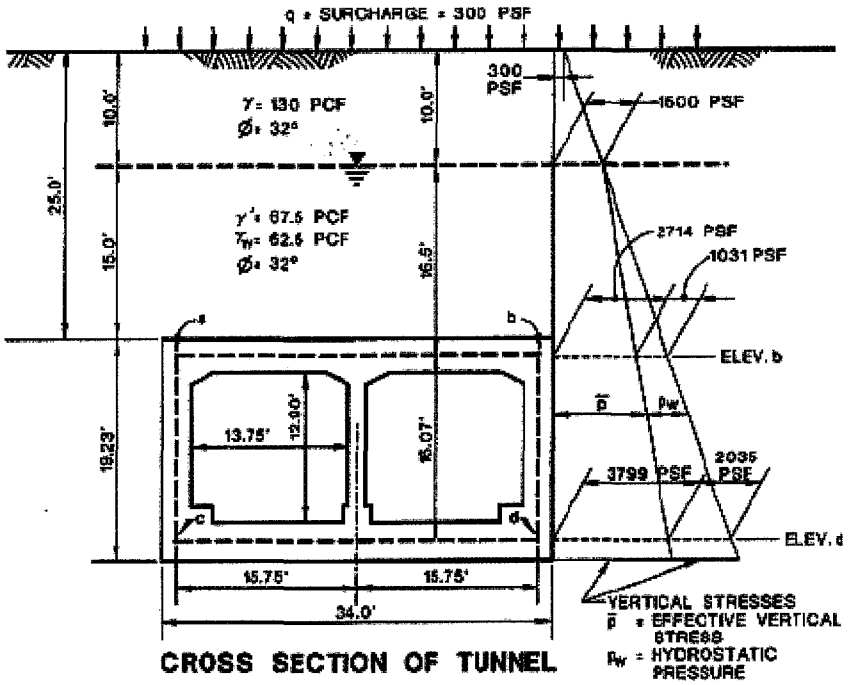

CROSS SECTION OF TUNNEL

ASSUMED SOIL PROPERTIES

SOIL UNIFORMLY NON-COHESIVE, Ø=32° (ANGLE OF INTERNAL FRICTION)

γ = 130 PCF (MOIST UNIT WEIGHT) γ' = 67.5 PCF (BOUYANT UNIT WEIGHT)

γ_w = UNIT WEIGHT OF WATER = 62.5 PCF

K_a = ACTIVE PRESSURE COEFFICIENT = 0.31 (SEE FIGURE 16-17a)

K_{MAX} = MAXIMUM LONG TERM HORIZONTAL PRESSURE COEFFICIENT. ASSUME FOR THIS ILLUSTRATION THAT THE GEOTECHNICAL CONSULTANT RECOMMENDS $K_{MAX} = (1.3)(K_0) = (1.3)(1-\sin\phi) = 0.61$

FULL VERTICAL ROOF LOAD

EARTH COVER------ 10 X 30 + 15 (67.5 + 62.5) = 3250
ROOF SLAB---------- 480
SURCHARGE, q---------- 300
TOTAL 4030 PSF

VERTICAL INVERT REACTION (CASES 1 AND 3)

FROM ROOF---------- 4030
WEIGHT OF WALLS = 14,000*±/34 ---------- 410
TOTAL 4440 PSF

VERTICAL INVERT REACTION (CASE 2)

MODIFY INVERT REACTION AS REQUIRED TO ACCOUNT FOR UNBALANCED HORIZONTAL LOADING

VERTICAL STRESSES IN SOIL

AT ELEV. b, $\bar{p}$ = (130) (10) + 300 + (67.5) (16.5) = 2714 PSF; p_w = (62.5) (16.5) = 1031 PSF
AT ELEV. d, $\bar{p}$ = 2714 + (67.5) (16.07) = 3799 PSF; p_w = 1031 + (62.5) (16.07) = 2035 PSF

HORIZONTAL PRESSURES ON TUNNEL STRUCTURE

LET p_1 = MAXIMUM LONG-TERM HORIZONTAL PRESSURE

$p_1 = (K_{MAX})(\bar{p}) + p_w$ — AT ELEV b, p_1 = (0.61) (2714) + 1031 = 2667 = 2690 PSF; AT ELEV d, p_1 = (0.61) (3799) + 2035 = 4352 = 4350 PSF

LET p_2 = MINIMUM UNDEWATERED SHORT-TERM PRESSURE

$p_2 = (K_a)(\bar{p}) + p_w$ — AT ELEV b, p_2 = (0.31) (2714) + 1031 = 1872 = 1870 PSF; AT ELEV d, p_2 = (0.31) (3799) + 2035 = 3213 = 3210 PSF

LET p_3 = ACTIVE EARTH PRESSURE IF GROUND IS DEWATERED

$p_3 = (K_a)(\gamma H + q)$ — AT ELEV b, p_3 = (0.31) (130 X 26.5 + 300) = 1161 = 1160 PSF; AT ELEV d, p_3 = (0.31) (130 X 42.57 + 300) = 1809 = 1810 PSF

NOTE: 1 psf = 0.04788 kPa
1 pcf = 16.0185 kg/m^3
1 ft = 0.3048 m

Fig. 4-31a – Illustrative Design Calculations for a Cut-and-Cover Box Structure (Bickel et Al., 1996)

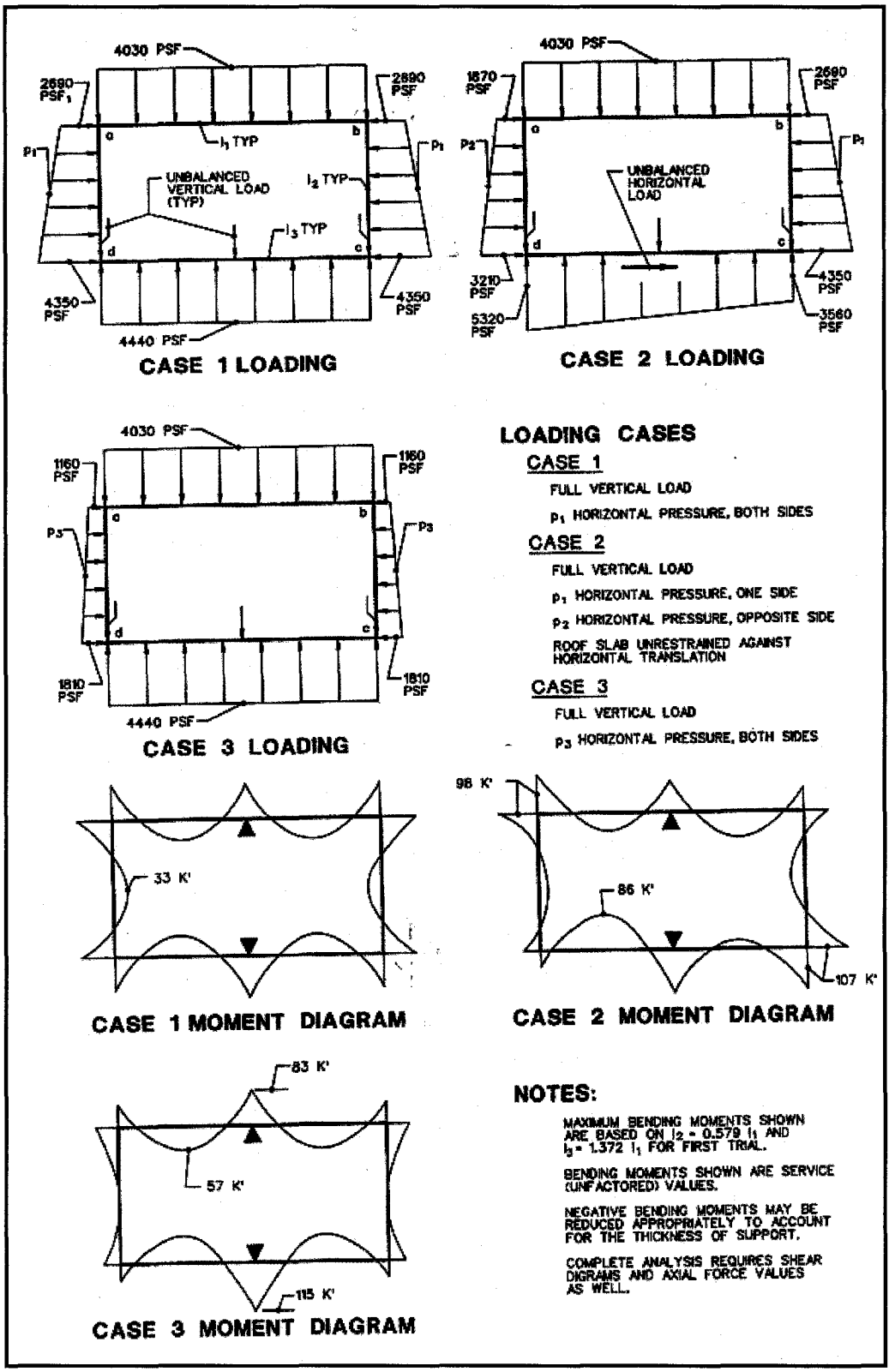

Fig. 4-31b – Illustrative Design Calculations for a Cut-and-Cover Box Structure (Bickel et Al., 1996)

It should be noted that in frame analysis, the cracked moment of inertia (I_c) is typically much less than the gross moment of inertia (I_g). If strains are not a concern, gross values of EI should be used since only relative internal reactions (forces and moments) are desired.

a.9) Reinforced Concrete Design

Design should be carried out according to AASHTO specifications in the design of reinforced concrete for cut-and-cover road tunnels. The design must also conform to all local and other mandated codes, except when particular provisions of those codes can be shown not to be applicable.

Where earthquake forces are a factor, the structure should be designed for a desired degree of ductility and toughness as well. To incorporate these provisions into reinforced concrete design, authoritative and pertinent literature on the subject of seismic design should be consulted.

Minimum requirements for shrinkage and temperature reinforcement, as specified by AASHTO, have not been considered applicable for cut-and-cover road tunnels. For the design of road tunnel walls and roof slabs, with transverse joints about 50 ft apart, it is common to provide temperature and shrinkage reinforcement, on both faces of the wall or slab, in the amount of 80 to 100 percent of normal ACI 318 (7.12) requirements, up to a specified maximum. Treatment of invert slabs has been similar to that of walls and roof slabs. In some cases, subgrade drag may need to be investigate

b) Shoring Systems –

To prevent detrimental settlement of the ground, utilities, and adjacent structures, temporary walls or shoring walls have to be in place before significant cut-and-cover excavation commences.

The design of the support system should consider factors including the following:

- Physical properties of the soil throughout and beneath the cut;
- Position of the groundwater table during construction;
- Width and depth of excavation;
- Configuration of the subsurface structure to be constructed within the cut;
- Size, foundation design and proximity of adjacent structures;
- Number, size and type of utilities crossing the proposed excavation, or adjacent to the excavation;
- Requirements for street decking across the excavation;
- Traffic and construction equipment surcharge adjacent to the excavation;
- Noise restrictions in urban areas.

Authoritative and pertinent literature on the subject of shoring walls should be consulted for types of walls and wall support; design; and performance of shoring systems. An excellent reference on allowable movement of excavation support system is

c) Decking

Decking consists of deck framing and roadway decking. Figures 4-32 a and b illustrate a typical general arrangement for street decking over a cut-and-cover excavation.

For cut-and-cover road tunnels, similar to cut-and-cover for rapid transit structures (SFBART, WMATA, etc), deck framing should be designed for AASHTO HS 20-44 loading, or for loading due to construction equipment that will operate on the deck, whichever is greater. Allowable stresses in the deck framing are limited to basic unit stresses as prescribed by AASHTO. For deck beams, maximum deflection due to service live load and impact equal to 1/600 of the span is usually permitted.

When the live loads are construction equipment and the deck is not carrying public traffic, permissible deflection due to service live load and impact can be increased to 1/500 of the deck beam span, and the allowable stress on the webs of cap beams may be increased by 20%.

Fig. 4-32c illustrates an application where the structural steel deck beams are utilized also as struts so that the deck structure becomes the uppermost bracing tier.

d) Excavation and Groundwater Control –

d.1) Internally Braced Excavations –

Figure 4-33 shows the general construction sequence typically employed during construction of a cut-and-cover road tunnel structure. The two most commonly used pieces of equipment for excavating braced cuts are the backhoe and the clamshell bucket. Extensible, vertical or inclined belt conveyors have also been employed to, for example, raise excavated material from the hole and deposit into a truck-loading bin.

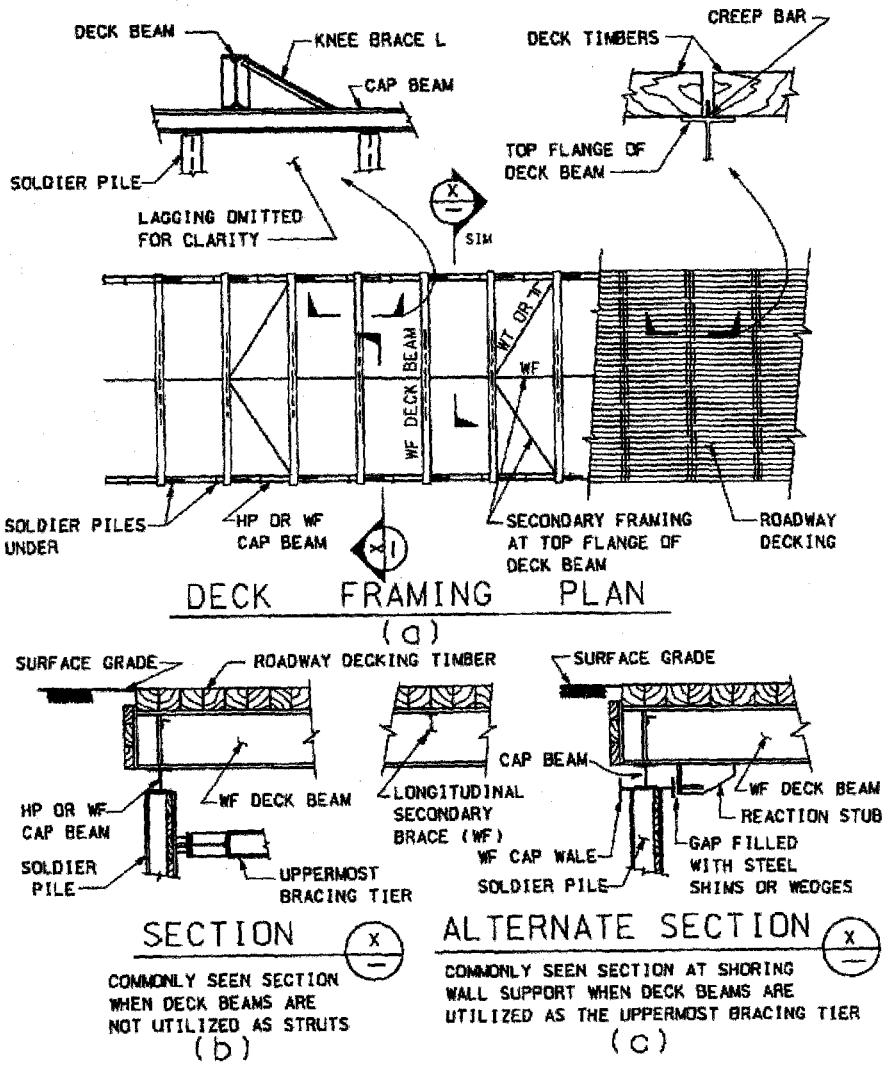

Figure 4-32 – Street Decking – Commonly Seen Framing Plan and Sections (Bickel et al., 1996)

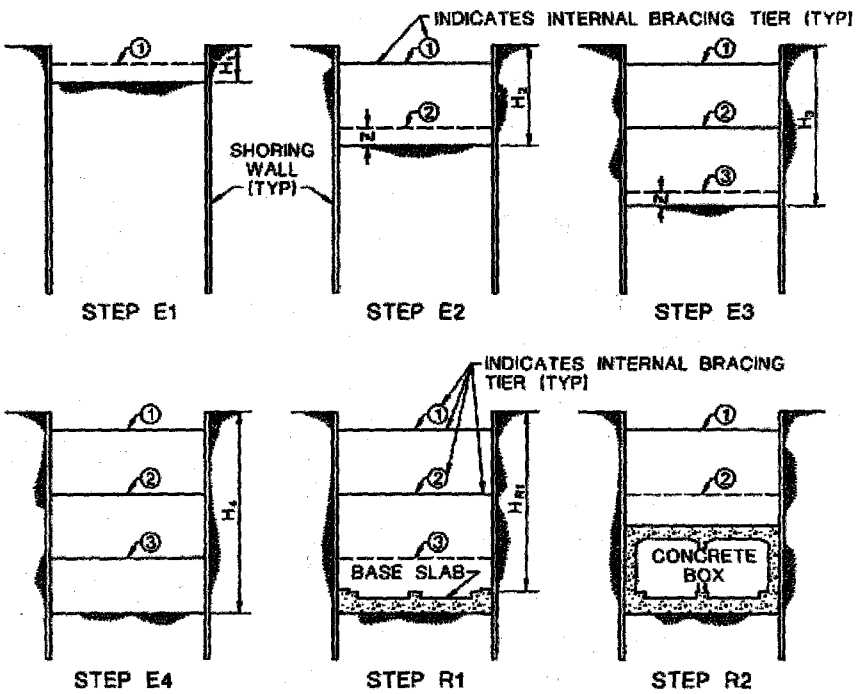

GENERAL CONSTRUCTION SEQUENCE

STEP E1: EXCAVATE TO DEPTH H_1 AND INSTALL TIER NO. 1.
STEP E2: EXCAVATE TO DEPTH H_2 AND INSTALL TIER NO. 2.
STEP E3: EXCAVATE TO DEPTH H_3 AND INSTALL TIER NO. 3.
STEP E4: EXCAVATE TO DEPTH H_4 (FINAL SUBGRADE).

STEP R1: (a) PLACE CONCRETE BASE SLAB.
(b) AFTER BASE SLAB HAS AGED ADEQUATELY, REMOVE TIER NO. 3.

STEP R2: (a) COMPLETE CONSTRUCTION OF CONCRETE BOX.
(b) AFTER ROOF SLAB HAS AGED ADEQUATELY, REMOVE TIER NO. 2.

STEP R3: (NOT SHOWN.) BACKFILL TO DEPTH $H_1 \pm$ AND (SUBSEQUENTLY) REMOVE TIER NO. 1. COMPLETE BACKFILL. IF SHORING WALL IS SOLDIER PILES AND LAGGING OR STEEL SHEET PILES, REMOVE (PULL) SOLDIER PILES OR SHEET PILES IF PERMITTED TO DO SO. COMPLETE SURFACE RESTORATION.

Fig. 4-33 – General Construction Sequence Typically Employed for a Cut-and-Cover Road Tunnel Structure (After Bickel et al., 1996)

d.2) Tied-back Excavations –

Any excavation method that will limit the vertical distance between a tie-back row and the bottom of the excavation to the prescribed amount, at any step in the construction sequence, should be considered.

If the cut-and-cover excavation is sufficiently long, the utilities or decking crossing the excavation are not a problem, and the soil to be excavated is dry and competent enough to act as a haul road, the most suitable excavation method that employs a haul ramp out of the cut will usually be the most efficient. At the end of the excavation, when the haul ramp itself must be removed, more common methods will need to be employed to complete the excavation.

d.3) Groundwater Control –

When it is feasible to do so, it is more economical to lower the groundwater level below the planned elevation of excavated subgrade before excavation commences. In saturated pervious soils, pre-draining offers the following advantages:

- Excavation can be performed in the dry;
- Results in a more efficient shoring system because of the reduction in lateral pressure;

- Allows use of soldier piles and lagging systems, etc.;
- Prevents occurrence of an unstable bottom of excavation.

Details on: pre-draining with deep wells; use of pressure relief wells; stability against piping; internal control of water; and settlement due to construction dewatering; are treated in authoritative and pertinent literature on groundwater control of cut-and-cover excavations.

e) Permanent Shoring Walls and Support –

Slurry walls and Soldier Pile and Tremie Concrete walls (SPTC walls) are sometimes used both as temporary support walls for the cut-and-cover construction, and as the permanent walls of the tunnel structure.

For this concept, a reinforced concrete curtain wall should be placed inside the shoring wall, for aesthetic reasons, and complete bonding between the slurry or SPTC wall and the interior curtain wall should be ensured.

Internal bracing tiers may also be designed to serve both as internal support during construction and as permanent support; the permanent internal bracing tier(s) typically also serves as the structural steel framing for the intermediate floor(s) as well.

f) Water-tightness –

Structures located in permeable soils and below the water table will be subject to infiltration, which tend to concentrate at construction and contraction joints.

Infiltration is normally unacceptable since it would result in unsightly streaking of wall and ceiling finishes. The designer should design for complete water-tightness. Complete external waterproofing is typical for roofs, and is usual for walls. External waterproofing of invert slabs is sometimes specified, depending on the slab thickness, subsurface soil, and other factors.

A discussion of: water stops; common types of external waterproofing; and internal repair of leaks; can be found in authoritative and pertinent literature on the subject of water-tightness.

4-11 Seismic Design of Tunnels

In general, underground facilities have experienced a lower rate of damage than surface structures; however, some underground structures have experienced significant damage in recent earthquakes, including: the 1995 Kobe earthquake in Japan; the 1999 Chi-Chi earthquake in Taiwan; and the 1999 Kocaeli earthquake in Turkey. An ITA/AITES report (Hashash et al, 2001) describes approaches used by engineers in quantifying the seismic effects on an underground structure. It discusses special design issues, including the design of tunnel segment joints, and joints between tunnels and portal structures.

In general, seismic design loads for underground structures are characterized in terms of the deformations and strains imposed by the surrounding ground, due to interaction between the ground and the structure. In contrast, surface structures are designed for the inertial forces caused by ground accelerations.

There are basically three approaches to seismic design of underground structures:

1. The simplest approach ignores interaction of the underground structure with the surrounding ground. The free-field ground deformations due to a seismic event are estimated, and the underground structure is designed to accommodate these deformations. This approach is satisfactory when low levels of shaking are anticipated or when the underground facility is in a stiff medium, such as rock.
2. The pseudo-static approach involves ground deformations imposed as a static load; the soil-structure interaction does not include dynamic or wave propagation effects.
3. In the dynamic analysis approach, dynamic soil-structure interaction is conducted using numerical analysis tools, such as finite element or finite difference methods.

4-11 Lighting

a) General –

Geographic location, orientation, and portal surroundings influence the ability of the motorist to adapt from the bright ambient roadway to the dim tunnel interior. Lighting concepts are used to diminish the contrast between the two environments; the most prominent lighting concepts used are the symmetrical and the asymmetrical concepts, of which there are two types – the counter beam and the line-of-sight. Linear or point source luminaires, or a combination of types of sources, are employed to provide specific illumination requirements for unidirectional or bidirectional traffic tunnels, as appropriate to the system.

Figure 4-34 gives a graphical representation of tunnel lighting nomenclature.

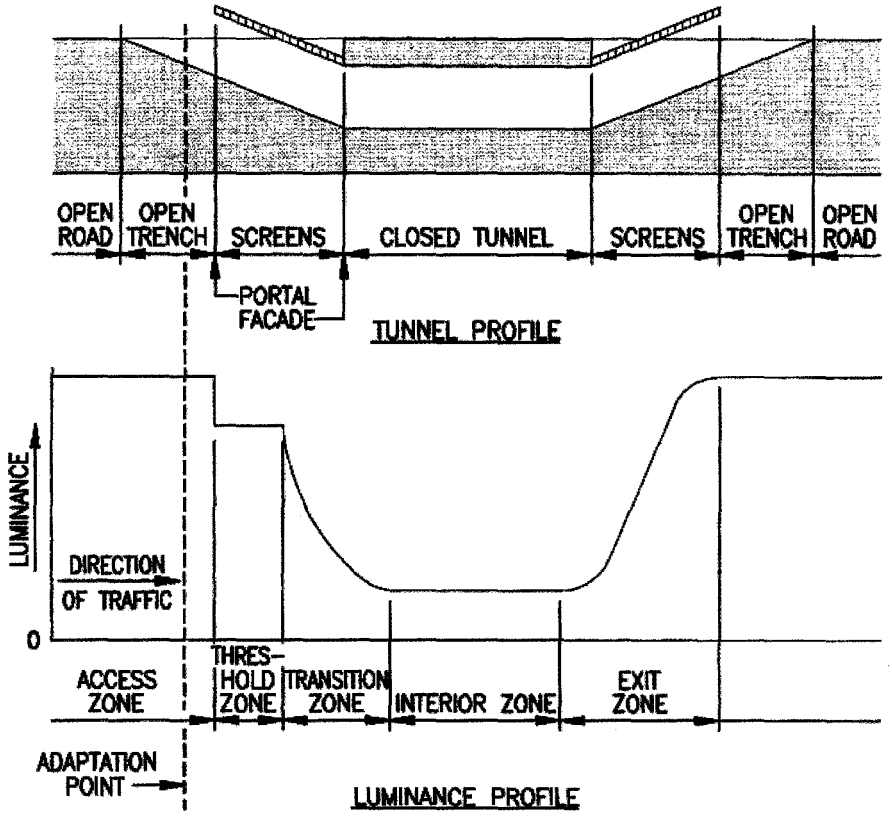

Fig. 4-34 – Tunnel Lighting Nomenclature
(Schreuder, '64)

b) Tunnel Classification –

Depending on the authority, there are three types of vehicular tunnels: underpasses; short tunnels and long tunnels.

Underpasses – AASHTO defines an underpass as a portion of roadway extending through and beneath some natural or man-made structure, which, because of its limited length-to-height ratio requires no supplementary daytime lighting. Length-to-height ratios of approximately 10:1 or lower will not require daytime underpass lighting. The Illuminating Engineering Society (IES) and the International Commission on Illumination (CIE) generally recognize all covered highways as tunnels and do not recognize an underpass as a separate and distinct structure.

Short Tunnels – IES and CIE define a short tunnel as one where, in the absence of traffic, the exit and the area behind the exit can be clearly visible from a point ahead of the entrance portal. For lighting purposes, the length of short tunnel is limited to 150 ft (46 m); tunnels up to 400 ft (122 m) long may be classified as short if they are straight, level, and have a high width/height to length ratio.

Long Tunnels – IES defines a long tunnel as one with an overall length greater than the safe stopping sight distance.

c) Entrance Lighting –

This is the most critical section of tunnel lighting, and consideration should be given to the use of low-pressure sodium and high-intensity point sources, thus permitting a reduction in the number of units.

Attention should be paid to luminaire type selection, location and spacing, to reduce glare and flicker throughout the tunnel.

Evaluation of lighting levels and transition time (calculated from 20 degree field to the portal) should consider the following factors:

- Tunnel orientation;
- Latitude;
- Geographical location;
- Approach grades;
- Terrain;
- Conditions where the tunnel lighting problem can be easily solved using conventional equipment.

d) Luminance in the Tunnel Interior –

Based on a reflectance factor of 50% for the walls and ceilings, and a reflectance factor of 20% for the roadway, Table 4-11 summarizes recommended values for luminaire levels by the three major authoritative sources. In many cases, economic factors, as well as the availability of proper lighting equipment, will play a major role in determining the final lighting level.

Table 4-11 – Summary of Recommended Day Interior Maintained Luminaire Levels in Candela per Square Meter (cd/m^2)

Authority	Walls (Up to 2 m above roadway)	Roadway
IES	5	5
AASHTO	5+	5+
CIE	1-15	1-15

d) Exit Lighting –

During the daytime, the tunnel exit appears as a bright hole to the motorist. Usually, all obstacles will be discernible by silhouette against the bright exit and will be clearly visible. This visibility by silhouette can be further improved by lining the walls with tile or panels having high reflectance and thus permitting greater daylight penetration into the tunnel, as shown in Figure 4-35.

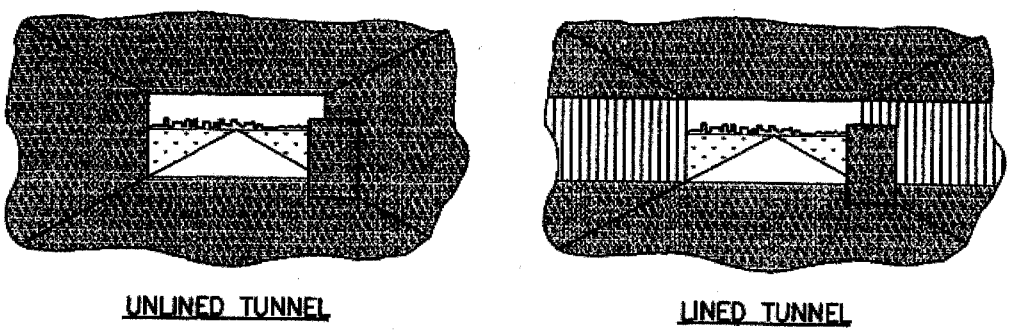

Fig. 4-35 – Effect of Natural Light Penetration on Walls at Tunnel Exit (Thompson and Fanslor, '68)

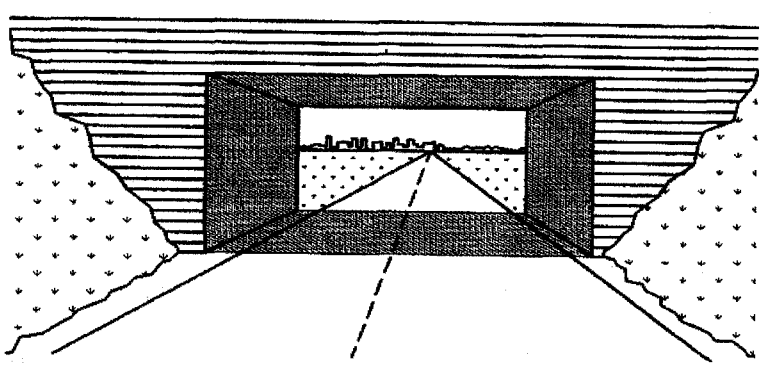

Figure 4-36 – Short Tunnel appears as a Dark Frame
(Schreuder, '64)

e) Lighting of Short Tunnels –

Short tunnels appear to the approaching driver as a black frame (see Figure 4-36), as opposed to the black hole experienced in long tunnels.

A lighting system is generally not required in short tunnels, as daylight penetration from each end and the silhouette effect of brightness at the opposite end, assure satisfactory visibility. Tunnels between 75 ft (23 m) to 150 ft (46 m) in length may require supplemental daytime lighting if daylight is restricted due to roadway depression, tunnel curvature, or proximity of tall buildings in urban areas.

f) Lighting of Long Tunnels

For satisfactory daylight visibility, lighting for long tunnels should follow the luminance profile illustrated in Figure 4-37. The system should be flexible enough to permit its operation at night at a reduced level.

The long tunnel requires two daytime lighting levels – one for the intensive zone (entrance zone comprising the threshold and transition sections) and another for the normal day zone (interior zone).

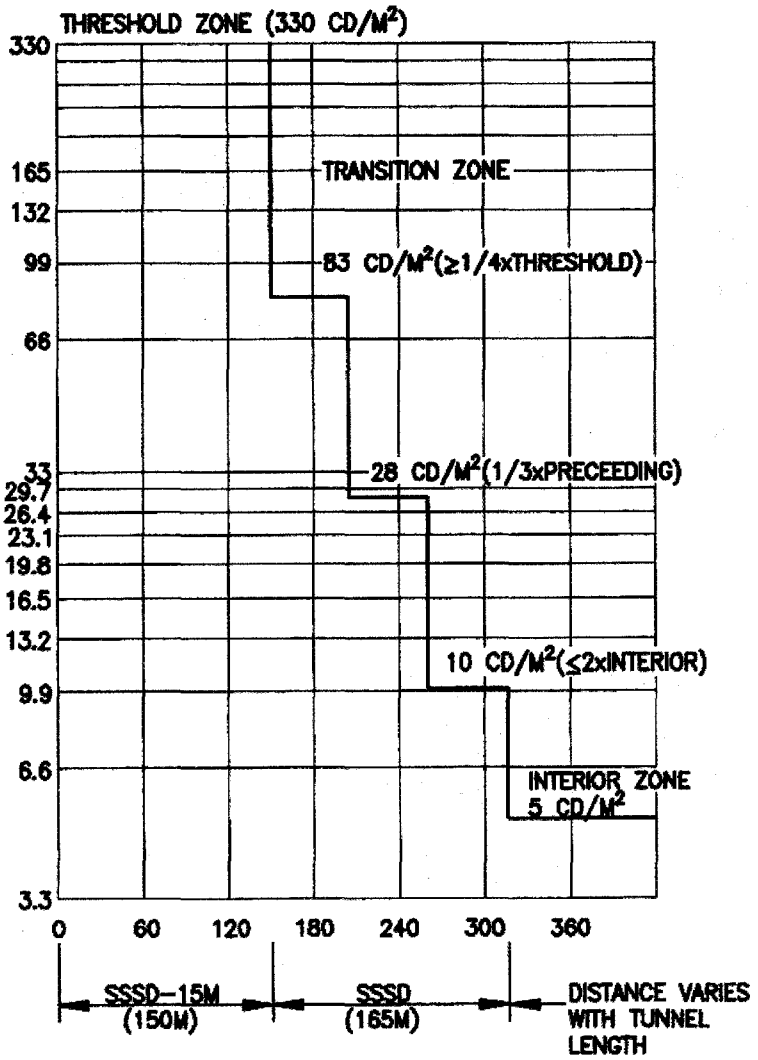

Figure 4-37 – Example of Tunnel Lighting Luminance Profile (ANSI/IES, '87).

g) Tunnel Lining

The brightness and uniformity of the interior walls and ceiling of the tunnel depend on the reflectance quality of the surface.

The light color and high reflectance of the tunnel ceiling is desirable because of the higher wall and roadway brightness that will result. A light-colored matte finish surface with a reflectance factor of at least 70% is recommended.

Finally, the tunnel roadway surface should have as high a reflectance factor as possible

h) Emergency Lighting

Complete interruption of tunnel lighting is unacceptable.

h.1) Dual Utility Power Sources – one-half of the tunnel lighting is connected to each supply, so that, in case of failure, at least one-half of the system remains energized until transfer of the entire load to the remaining source.

h.2) Single Utility Service and Standby Generator – one-sixth of the tunnel lighting is connected to an emergency circuit, which, in case of power failure, is immediately transferred to a central emergency battery system until the generator picks up to carry one-half of the tunnel lighting.

i) Design Computations

Mathematical methods of analysis (account for inter-reflection of light) have led to progressively more accurate coefficients of utilization data. The Zonal Cavity Method improved older systems by providing increased flexibility and accuracy in lighting calculations.

The designer should refer to ANSI/IES RP-22, American Standard Practice for Tunnel Lighting, for use of the Zonal Cavity Method. Computer software is readily available for illuminance and luminance calculations.

Finally, the IES Handbook (1990) gives a comprehensive procedure for developing a meaningful maintenance factor.

4-11 – Tunnel Surveillance/Management/Security

a) General –

Modern roadway tunnels and their approach roads require a centralized traffic control system to maintain safety. While particular requirements vary, the following minimum general surveillance and control systems are common to all, and should be used to provide the following:

1. Traffic Flow Monitoring -- Monitor traffic flow and identify impending congestion from breakdowns or accidents;
2. Safe Environment -- Maintain a safe tunnel environment responsive to traffic density and travel speed;
3. Communications -- Communicate traffic restrictions to motorists;
4. Emergency Response -- Mobilize required emergency response to clear accidents within the tunnel;
5. Emergency Systems Operations -- Initiate required emergency systems operations;
6. Service Equipment Monitoring -- Monitor status of tunnel service equipment

b) Design and Implementation –

Combined input from the disciplines of traffic engineering, computer/communication design, and software development is required for system design.

b.1) Traditional Design Approach – involves preparation of design plans and specifications for contractor construction, but is usually successful only when contracted directly with pre-qualified control systems contractors.

b.2) System Manager Approach – the system manager is contracted with to design and prepare procurement and installation contracts, and is responsible for system integration, documentation and training; he also provides the application software. The complete control systems services package includes: Operating Manual; Maintenance Manual; Training; Provisions to supply a management staff for a specified period during start-up; and a warranty that ensures responsibility for a specified period, for all components including manufacturer in-house product warranties that may have expired.

c) Tunnel Security –

The Tunnel Designer should make special reference to the FHWA/AASHTO Report entitled: '*Recommendations for Bridge and Tunnel Security*'; dated September 2003, and prepared by the Blue Ribbon Panel on Bridge and Tunnel Security. The Blue Ribbon Panel developed strategies and practices for deterring, disrupting, and mitigating potential attacks; they recommended policies and actions to reduce the probability of catastrophic structural damage that could result in substantial human casualties, economic losses, and socio-political damage.

4-12 Fire Precautions

a) General –

Special reference is made to FHWA Report No. FHWA-RD-83-032 entitled: '*Prevention and Control of Highway Tunnel Fires*'. This report presents methods of preventing, responding to, and controlling fires in existing and future highway tunnels. The means of evaluation of and reducing the risk for such fires and reducing damage, injuries, and fatalities are presented. The findings and recommendations of the report are based on evaluations of: (1) experimental tunnel fire tests; (2) significant highway tunnel fires; (3) observations of highway tunnels; (4) interviews with major highway tunnel operators; and (5) accident risks of unrestricted transit of hazardous materials. The effects of traffic, tunnel design, and operations on such risks are discussed. A ventilation system with a fire/emergency operating mode is recommended.

Furthermore, the National Fire Protection Association (NFPA) has published numerous standards, codes, recommended practices, and guides for fire and safety issues. The Tunnel Designer should refer to NFPA 502 entitled: '*Standard for Road Tunnels, Bridges and Other Limited Access Highways*', 2001 Edition.

In general, the following factors influence the determination of safety equipment and systems to be installed in a tunnel:

- Tunnel length
- Amount of traffic;
- Tunnel location (urban area, outside an urban area, underwater);
- Number of traffic lanes;
- Amount of heavy-goods traffic;
- Regulations in force for the transit of dangerous material through the tunnel

The significance of time in a tunnel fire can best be identified by the sequence of events in a fire situation as follows:

- Time to detect a fire;
- Time to send an alarm;
- Time to verify the source of the fire;
- Time to implement emergency response procedures.

b) Preconditions

Building elements that are an integral parts of the main load-bearing systems and fittings that are adjacent to traffic spaces should be designed for the effects of fire.

Fire protection documentation should be presented in the land acquisition plan.

When designing the fire protection, the heating as well as the cooling phases of the fire cycle should be taken into consideration.

It will be accepted that attention be paid only to the heating phase when doors are designed and when the design is carried out by means of testing.

A tunnel should be designed so as to prevent the propagation of highly inflammable or explosive gases and fluids to side spaces. Installations that are parts of the safety system of the tunnel should be protected against fire during the required time. The required time must be specified in the technical specifications.

Installations should be designed so that excessive effects on an individual structural member will not result in other subsequent damages.

c) Verification of fire resistance

The fire resistance capacity should be verified by means of testing , calculation or a combination of these alternatives.

For rock tunnels, the verification of the resistance capacity is required only for the main load-bearing system, provided that the capacity is ensured by a supporting construction.

Structures that separate escape routes and chambers and access routes and escape routes should also comply with the requirements on integrity and isolation.

It must be proved that main load-bearing systems, fittings and installations have enough capacity to resist fire effects during the time required for evacuation and rescue operations without the risk of falling parts that can cause local damage. Installations should comply with this requirement at temperatures below 270° C (543.2K).

It should be remembered that the chipping of concrete structures starts at a surface temperature of 150-200° C (423.2-473.2K). The speed of heating as well as the strength and impermeability of the concrete are also significant, influential factors.

d) Materials –

Materials in main load-bearing systems, fittings and installations must not contribute to the spread of fire and fire combustible gases.

A material should be non-combustible unless the contribution to the spread of fire by the material can be considered negligible.

Supplementary requirements should be specified in the technical description(s). The requirements should be based on an estimate of the damage the client considers to be acceptable.

Plastic materials in fittings and installations should be free from chlorine.

e) Checking –

Emergency plans should be prepared, and should include instructions that state how different fire scenarios should be handled as well as schemes for regularly training of the personnel involved. The plans should also include explosion scenarios.

4-13 Ventilation

a) General –

The design should control the level of vehicle emission contaminants within the roadway tunnel during normal tunnel operations, and should also control smoke and heated gases during fire emergencies. In general, the design of the ventilation system should comply with the following general requirements:

- Requirements on air quality;
- Requirements on discharge to the environment in the vicinity;
- Requirements on noise and vibrations;
- Requirements on visibility;
- Requirements on protection against propagation of combustible gases and fire;
- Control of heat and smoke movement during a fire incident.

b) Vehicle Emissions –

Most passenger cars on the road in the U.S. today are spark-ignited engines fueled by gasoline; the major constituents of the exhaust are carbon monoxide, carbon dioxide, sulfur dioxide, oxides of nitrogen, and unburned hydrocarbons (Table 4-12).

Table 4-12 – Typical Composition of Spark-ignited Engine Exhaust

Component	% of Total Exhaust Gas Stream
Carbon Monoxide	3.0000
Carbon Dioxide	13.200
Oxides of Nitrogen	0.0600
Sulfur Dioxide	0.0060
Aldehyde	0.0040
Formaldehyde	0.0007
Adapted from Stahel et al. (1961)	

Compression-ignited engines are more prevalent in trucks and large buses, albeit, some small buses do have spark-ignited engines. This engine uses liquid fuel with low volatility, ranging from kerosene to crude oil, but usually diesel oil. As indicated in Table 4-13, the major components of diesel engine exhaust are: Nitrogen dioxide, carbon dioxide, and sulfur dioxide.

c) Criteria –

The permissible concentration level of contaminants within the tunnel roadway area should be in accordance with EPA and FHWA standards.

Table 4-13 – Typical Composition of compression-ignited Engine Exhaust

Component	% of Total Exhaust Gas Stream
Carbon Monoxide (maximum)	0.100
Carbon Monoxide (minimum)	0.020
Carbon Dioxide	9.000
Oxides of Nitrogen	0.040
Sulfur Dioxide	0.020
Aldehyde	0.002
Formaldehyde	0.001
Adapted from Stahel et al. (1961)	

d) Roadway Tunnel Ventilation Systems –

To limit the concentration of obnoxious or dangerous contaminants to acceptable levels during normal operation, and to remove and control smoke and hot gases during fire emergencies, tunnel ventilation should be provided by one of the following means:

- Natural means;
- Traffic-induced piston effects;
- Mechanical ventilation equipment.

The ventilation system selected should meet the specified criteria for both normal and emergency operations, and should be the most economical solution, considering both construction and operating costs.

When deciding on the type and design of ventilation system to be installed, the background levels of nitrogen dioxide (NO_2), carbon monoxide (CO) and particles should be taken into consideration.

- The ventilation system may be based either on longitudinal ventilation or cross ventilation or a combination of these principles (so called semi-cross ventilation).
- Longitudinal ventilation may be used in both one-way traffic tunnels and two-way traffic tunnels.

- In long tunnels where there is a risk of congested traffic, air evacuation, or alternatively, air supply through ventilation chimneys, may be needed along the tunnel.
- Longitudinal ventilation is inappropriate in two-way traffic tunnels that do not have separate emergency evacuation arrangements.

When selecting a ventilation system and designing it, the fact that the necessary air flow rate may decrease in the future should be taken into consideration; for example, as a result of reduced emissions from vehicles. Reduced air velocity in the tunnel and chimneys will affect the dispersion of pollution in the surrounding.

The mechanical ventilation plant should generate the necessary air velocity for the design fire load and its duration.

The entire ventilation system, as well as the associated components, should comply with the requirements on noise and vibrations.

e) Main fans –

The main fans supply the tunnel with fresh air from the outside and remove polluted tunnel air; for example through ventilation chimneys. Main fans may be grouped in the categories: air extraction fans and air supply fans.

Main fans should be fitted with outlet diffusers; reversible main fans should also be fitted with inlet diffusers.

Main fans for extracting and supplying air should preferably be designed as axial-flow fans with direct drive.

The design of the flow rate regulation system must be determined in each individual case. The flow rate regulation system may be designed according to different principles:

1. blades with variable pitch for continuous feedback control;
2. blades with variable pitch for step-by-step feedback control;
3. feedback control using a speed governor with power frequency converter;
4. two-speed electric motors.

Main fans should be installed with static and dynamic balancing; the fans should be mounted on absorbers. This must be done in order to limit the transmission of residual unbalance to the mounting.

f) Jet Fans –

Jet fans generate and maintain the necessary air flow rate in the traffic spaces if the vehicles do not generate sufficient piston effect. The air flow rate in the traffic spaces can be varied, partly by varying the number of jet fans put into operation, and partly by controlling the flow rate generated by the jet fans.

The relative longitudinal distance between the jet fans should be determined to obtain an even and stable air velocity profile from one fan or group of fans to the next.

Supplementary jet fans should be installed in low level zones of the tunnel if there is a need toextract polluted air caused by cold down-draughts.

Jet fans should normally be designed for reversible operation. They should preferably be designed as axial-flow fans with direct drive. The design of the flow rate regulation must be determined in each individual case.

Jet fans are normally installed hanging from the ceiling. The jet fans should be mounted to the frame supports using a uniform system in order to facilitate maintenance, replacement and stock-keeping of spare parts. Jet fans should be installed with static and dynamic balancing. The fans should be mounted on absorbers.

If the space for installation is limited, the jet fans may be fitted with adjustable air flow directors for setting the optimum jet effect.

g) Outdoor air intakes –

The grille over outdoor air intakes should be designed and located so that water, snow, leaves and rubbish cannot be sucked into the ventilation ducts or block the intake openings.

The outdoor air intakes should be located so that smoke generated by a fire in the tunnel or exhausts from the vehicles will not be circulated back into the ventilation system. It must not be possible for the air from extract air fans to be circulated back through the outdoor air intakes.

The air velocity in the ducts of outdoor air intakes should be determined in each individual case and the requirements concerning noise, vibrations and other factors which can affect the operational conditions should be taken into consideration.

Sound attenuators with porous absorbers should be designed so that they can be cleaned.

h) Air Extraction Outlets –

Outlets should be installed so that the requirements on air quality in the vicinity of the tunnel are complied with.

Extracted air may be discharged through tunnel openings or ventilation chimneys.

The air velocity in the ducts of air extraction outlets should be determined in each individual case and the requirements on noise, vibration and other factors which can affect the operational conditions should be taken into consideration.

i) Control of combustible gases

The following factors should be considered for the control of combustible gases:

- If a cross ventilation system is installed, the suction system should be designed so that the suction effect is automatically increased near the fire.
- The system should be supplemented with reversible jet fans in order to permit control of combustible gases.
- If a semi-cross ventilation system is installed, the system for airsupply should be reversible so that it can be turned into an extract air system. The ventilation system should be fitted with hatches that open automatically at high temperatures so that suction is increased near the fire.
- If a longitudinal ventilation system is installed, it should be possible to reverse the jet fans so that an effective control of combustible gases is possible.
- Non-reversible jet fans may be considered for a longitudinally ventilated tunnel intended solely for one-way traffic, after consultation with the local Rescue Service.

j) Dust separation plants –

Dust separation plants should be installed if an investigation based on the requirements on air quality and visibility shows that there is a need. The design of a dust separation plant must be made in each individual case based on the purpose of the plant.

If the purpose is to reduce the content of dust to improve visibility in the tunnel and clean the extracted air at the openings to protect the environment in the vicinity, the plant should be fitted with electro-filters.

If the purpose is to clean the extracted air through chimneys to protect the environment in the vicinity, the plant should be fitted with separators for coarse-grained particles.

Dust separation plants with electro-filters include separators for coarse-grained particles, electro-filters with equipment for flushing and sludge tanks, and, if necessary, fans.

The decrease in the contents of gases in a dust separation plant should not be included when designing the ventilation system.

The filter equipment is normally installed together with the main fans or in a separate tunnel tube running parallel to the road tunnel, but other installation principles may also be applied.

k) Design –

The design of the ventilation system should be based either on calculation of the necessary air flow rate to maintain air quality, or the control of the design fire; whichever controls. The preconditions concerning the air quality, as well as the requirements on the control of combustible gases, should be taken into consideration.

Calculation methods and sequence adopted and the assumptions applied should be explained and presented. The level of utilization of the ventilation plant should be shown in the calculations; this means documentation of the anticipated operational time of the plant, etc.

The presentation of the results should at least include the air flow rates, air flow directions, pressure drops and pollution levels for each ventilation sector calculated. The contributions to the air flow rates of the natural ventilation and the mechanical ventilation, respectively, should be documented.

Natural ventilation is taken to mean the air flow generated by the piston effects of vehicles and forces generated by meteorological conditions. Mechanical ventilation is taken to mean the air flow generated by the fans that can be controlled.

If mechanical ventilation is deemed not necessary, this must be proved by means of calculation. The need for the control of combustible gases must be taken into consideration.

In addition to the factors required according to Section 4-13 *a) – General*, the following factors should also be considered and presented in the design:

- Effects of air flow rates that can occur both at the openings of adjacent tunnel tubes or chimneys, and at the connecting points of ramp tunnels;
- Influence of wind against tunnel openings as well as other meteorological conditions;
- Suspended road signs;
- Piston effects generated by vehicles;
- Distribution of traffic in both directions in the case of two-way traffic tunnels with longitudinal ventilation systems.

Piston effects may be included only in the case of non-congested traffic, which may be assumed to prevail if the load factor during the design hour is lower than 0.8.

When designing a ventilation plant with jet fans the target should be that the air velocity in traffic spaces

will not exceed 3.28 ft/s (10 m/s) in one-way traffic tunnels and 23 ft/s (7 m/s) in two-way traffic tunnels.

When designing the fire control system it should be considered that a number of fans near the seat of the fire may be eliminated due to the heat effect.

l) *Construction –*

If necessary, electric motors should be protected against dropping water due to condensation; the need for this must be investigated in each individual case.

m) *Running adjustments –*

Running adjustments and testing of fans and other ventilation devices and associated control equipment should be coordinated and carried out simultaneously on all installations.

n) *Testing of functions –*

Ventilation plants should be designed to permit regular testing of the functions and associated control equipment.

o) *Inspection –*

Ventilation devices should be fitted with openings and hatches to the extent necessary to permit inspection and cleaning.

4-14 Drainage Systems

a) *General –*

Drainage systems to collect, treat, and discharge wastewater resulting from fire-fighting operations, washing operations, and leakage, should be installed in tunnels. Side spaces should be fitted with the necessary water and sewage connections.

b) *Drainage Design Criteria –*

Drainage system design should be predicated on proper determination of the anticipated flow rate (peak discharge rate) of the water to be drained.

Details on Tunnel drainage, drainage pump stations, drainage pumps, water treatment, and flood protection are given in Bickel et al. (1996).

c) *Drainage –*

The tunnel drainage system should collect and drain off water in the tunnel. Road drainage should be constructed to ensure that the pavement structure is kept dry and that water can run off unobstructed from the prepared sub-grade to maintain the properties of the bearing capacity.

d) *Dewatering –*

Drainage devices should collect and drain off surface water from the carriageway and road zone to avoid flooding and other associated problems. Surface water systems should be designed to permit collecting and handling of combustible or toxic fluids.

Drainage devices should prevent the surface water from road and ground zones outside the tunnel from entering the tunnel.

The methods for taking care of effluents should be resolved in consultation with the municipal body responsible for water supply and sewerage and the body responsible for nature conservation of the applicable county administration.

e) *Basins –*

Basins should have sufficient capacity to collect the necessary amounts of water and to allow the necessary sedimentation time for pollution suspended in the water.

f) *Water supply –*

The need for water hydrants for cleaning purposes, and fire hydrants as well as the requirements on their location and capacity should be specified in the technical specifications.

g) *Preconditions*

Drainage, water removal and water supply systems must not be damaged due to freezing. Protection against freezing can be achieved by placing the devices below the frost penetration depth or in a frost-protected space or by means of insulation. If frost protection is achieved by means of insulation, the heat available on the hot side of the insulation should be considered.

If the drainage water will be re-used by means of infiltration or analysed to determine its chemical composition, two separate sewerage systems must be installed, one for drainage water and the other for surface water.

g.1) *Drainage* – The amounts of drainage water in rock tunnels should be estimated on the basis of a rock mass investigation and the driving and waterproofing measures employed.

Subsoil drains should be fitted with manholes at intervals not exceeding 325 ft (100 m).

Rock tunnels -- The theoretical floor profile of the excavation should be given a crossfall of about 2 %. The drains should be laid at the lowest point of the tunnel floor with an invert level of at least 1 meter below the carriageway. Drains, collecting pipes and other pipes are normally laid in a separately blasted pipe trench along one of the walls. A layer of at least 1 ft (0.3 m), consisting of permeable material, should be laid under the pavement structure so as to comply with the drainage requirements. This requirement is met if the rock is blasted to a level of at least 1 ft (0.3 m) below the theoretical profile of the floor in 15 ft (5 m) sections.

Drain pipes should be connected to collecting pipes (surface water pipes) by means of gullies. Outlets from the drain pipes should be installed at intervals not exceeding 650 ft (200 m).

Normally the water will run out of the tunnel under gravity or to pumping stations installed at low zones of the tunnel. It should be possible to measure the water flow rates and the water quality in the pumping stations.

The final extent of drainage measures cannot be decided until the blasted rock masses have been mucked out.

Tunnels on sub-grades of soil -- Drainage systems should be designed according to AASHTO guidelines.

Concrete tunnels -- Ground drains should be installed at intervals not exceeding 65 ft (20 m).

g.2) *Dewatering* – Gullies that collect the surface water should be installed in tunnels and connected to longitudinal pipes. The gullies should be designed so that the propagation of fire into the outward-bound pipes is prevented.

Gullies are normally fitted with grit chambers and water seals. Manholes can also be fitted with grit chambers and water seals. The distance between gullies should be such that the catchment area for each gully will not exceed 2,700 ft^2 (250 m^2) and so that the longitudinal distance will not exceed 65 ft (20 m). Attention must be paid to gradients and crossfalls in order to minimize the length of the flow paths. Gullies should be installed outside lanes.

The runoff should normally flow towards the side of the tunnel, that is, without entrances to emergency escape routes. If this cannot be achieved, two gullies or, as an alternative, covered grooves should be installed "upstream" of the entrance to reduce the risk of burning fluids passing the entrance. Covered grooves may be used instead of gullies. The possibilities for adjusting the covering of grooves and the covering of gullies should be the same in both cases.

The Tunnel drainage design should incorporate oil/water separators to separate gas and oil spills from wastewater; typically, prior to discharge of wastewater to a designated system, oil/water separators enable break-up of gas and oil influent, which rise to the surface, facilitating removal and proper disposal.

The design water flow rates for pipe systems should be specified in the technical specifications.

g.3) *Basins* -- Pump sumps and pumping stations should be installed in the low zones of the tunnel. Where necessary, the surface water should be drained off to sedimentation basins. Sedimentation basins should be fitted with water seals, oil traps and cleaning devices. It should be possible to shut off the discharge from the sedimentation basins so that the fluid can be analyzed.

The need for decontamination before further fluid handling takes place should be based on the results of the analysis of the quality of the fluids.

The water flow rates, water volumes and the sedimentation time which should be the basis for the design of the sedimentation basins should be specified in the technical specifications.

The normal sedimentation time should be assumed to be 36 hours.

g.4) *Water supply* – The water flow rates that should be the basis for the design of the pipeline system should be specified in the technical specifications.

h) *Design* --

The flushing water or the fire water will normally be designed factors for the water removal systems in tunnels.

The protection of the water supply and sewerage pipes grouted into concrete structures from freezing should be designed for the maximum cold content.

Protection of other water supply and sewer pipes from freezing should be designed for the mean cold content.

i) *Materials* --

Gullies and the coverings of gravity sewers for surface water should be made of incombustible materials.

Gullies in the concrete base plates between the tunnel walls should have holes in the upper part of the gullies or covering so that they can serve as ground drains.

Manholes covers should be fitted with locking devices.

5.0. Design of Construction

5-1 The Construction Process

During the construction phase of a tunnel project, the following three functions affect work progress:

a) Prediction –

The designer predicts ground and tunnel behavior consistent with assumptions upon which the design is based. Economic construction should depend on a plan of phased progressive exploration, where work is prepared to different degrees of detail for different distances (and times) ahead; this plan is based on the progressive acquisition of knowledge, conceived as a phased qualitative improvement of predictive information (Fig. 5-1), as discussed below:

- *Phase 1*- this period provides general guidance for 3-6 months ahead to ensure availability of special plant and equipment ahead of requirement at the phase;
- *Phase 2* – this period provides guidance for a period of days ahead and indicates specific departures from recent experience or the need for special expedients;
- *Phase 3* – this period provides the most specific guidance for the immediate shift working (a sufficiently precise nature of the problem to design the solution).

b) Execution –

Construction is planned to take account of predictions, with regard to overall safety and security of the works and economy of the operation. Tunnel construction methods may be classified with respect to the degree of robustness across variations of ground (see Fig. 5-2):

- *Tolerance* – ability to operate within a wide range of ground conditions, implying immediate acceptability of a certain range of conditions;
- *Adaptability* – ability to be modified, without appreciable cost or delay, to meet foreseen variations in ground conditions, implying the ability to accept a certain range of conditions

Figure 5-2 assumes that each example method illustrated is limited by a value of ground strength, q_u, adequate for stability; and by upper limits of q_u related to inherent strength and RQD.

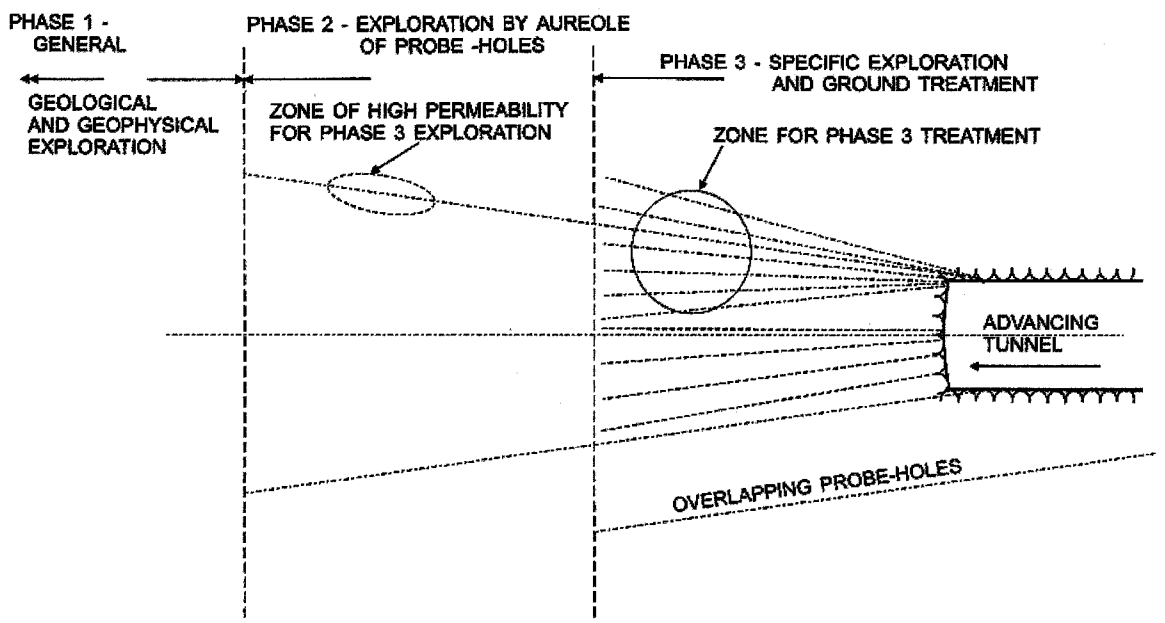

Figure 5-1 – Phases in Progressive Exploration (After Wood, 2000)

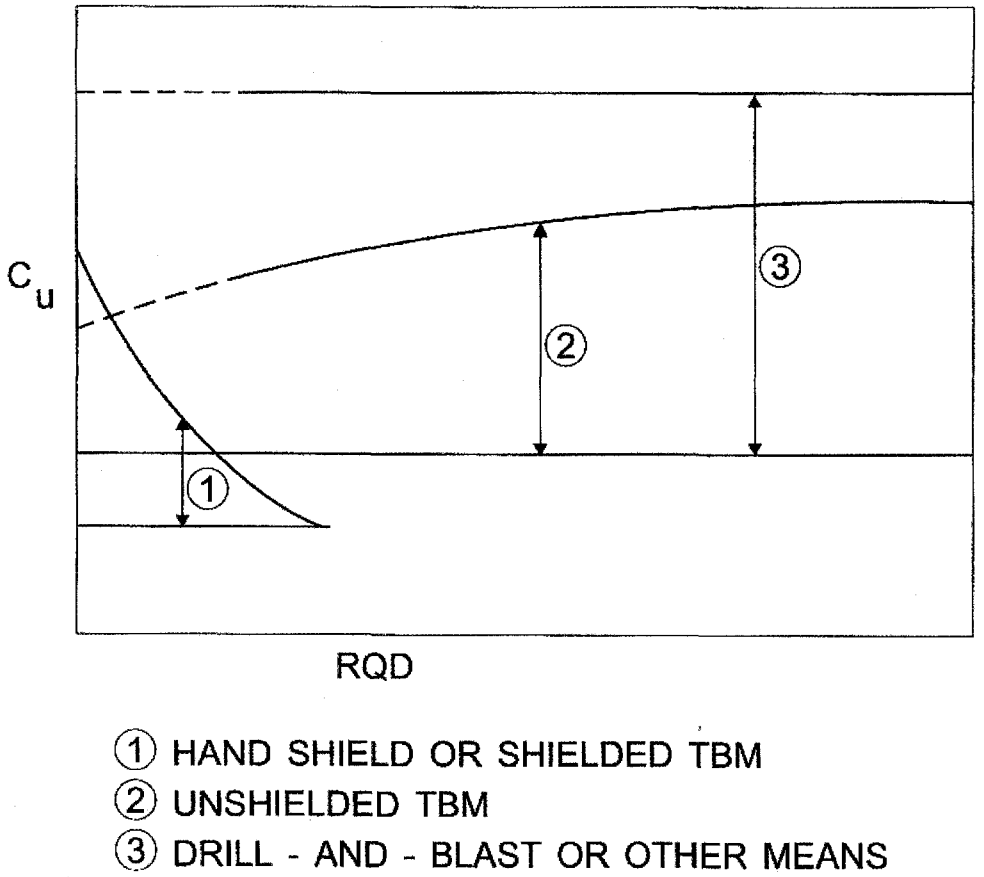

Figure 5-2 – Examples of Tolerance of Methods of Tunneling (After Wood, 2000)

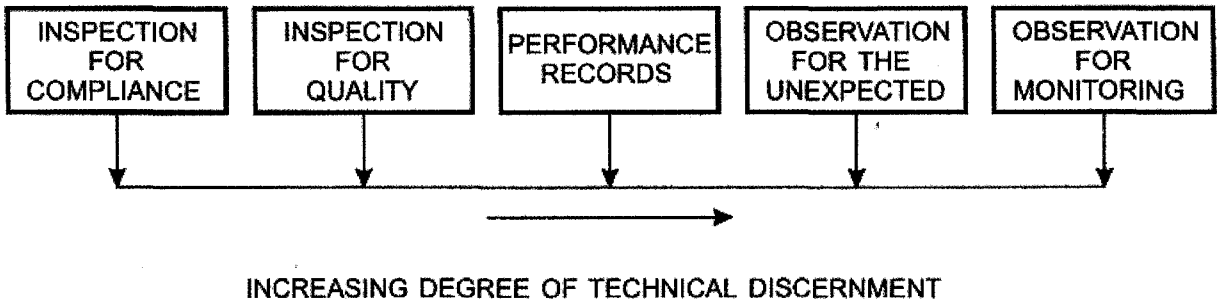

Figure 5-3 --- Observations of Construction (Wood, 2000)

c) Observation –

Construction inspection, which may include provision of design data to permit refinement of the initial design (see Fig. 5-3), includes several functions:

Inspection – ascertains that work is conducted in compliance with specifications supplemented by other particular requirements, including those arising from prediction;

Geological Observation – gives advance warning of unforeseen hazards;

Performance Observation – recording of obvious characteristics of defects, and of movements, strains, stresses, groundwater levels, pore water pressures, etc.

5-2 Bidding Strategy

a) General –

A bidding strategy should be prepared, whether or not construction is separated contractually from design of the project, where competition is based primarily on price.

Assessment of geological risk should be a central component of the bidding strategy, and may be approached in three elements:

i. *Factual information* on geological hazards available to bidders;

ii. *Interpretation of factual data* with areas of major uncertainty identified in relation to engineering consequences

iii. *Consideration of the extent of the geological hazard* imposed on the bidder by the terms of the contract, giving rise to geological risk when coupled with the preferred method of construction.

Bidding strategy should be dominated by iii) resulting in the following risk sharing scenarios:

1. *No Risk Sharing* – full imposition of geological risk on Contractor, who is expected to take responsibility for circumstances incompatible with data provided by designer(s).

2. *Protection of Contractor against 'unforeseeable' extreme risk* – in the absence of an obligation by the Engineer to reveal his understanding of 'foreseeable' at bid time, there remains problems in interpretation of 'foreseeable' risk.

3. *Equitable Risk Sharing* – elements of geological hazard of major importance to a preferred scheme of construction and to its cost are identified, with reimbursement based on stated Reference Conditions. The Contractor must be prepared, in turn, to provide, from time to time, details of his proposals for undertaking the work in sufficient detail to permit assessments against any particular interests of the Owner which might be affected.

5-3 Choice of Method

a) General –

The choice of method is usually dictated by the degree of certainty to which potential geologic problems may be identified and located, and should include consideration of the following factors:

- Ground conditions
- Continuous tunnel length of a particular size;
- Extent of inter-connection between tunnels;
- Useful tunneled space in relation to practicable tunnel profiles;
- Value of time;
- Spacing between tunnels;
- Local experience and maintenance facilities;
- Accessibility of project;
- Environmental concerns.

For overall project economy and optimal construction strategy, there needs to be clear mutual understanding of the significance of the factors listed above.

Details on the possible significance of each of these factors are given in Wood (2000).

REFERENCES

AASHTO 1984
American Association of State Highway and Transportation Officials (AASHTO) 1984 *Guide for Roadway Lighting,* Washington, D.C.

Abramson 1994
Abramson, L. W. 1994. Groundwater lowering and drainage techniques. In *Ground Control and Improvement,* P.P Xanthakos, L. W. Abramson, and D.A. Bruce, eds. New York: John Wiley and Sons.

Adrian, W.K. 1990
Adrian, W.K. 1990 " A Method for the Design of Tunnel Entrance Lighting," *Journal of the Illuminating Engineering Society,* Winter.

Adrian, W.K. 1987
Adrian, W.K. 1987 Adaptation Luminance When Approaching a Tunnel in Daytime, Lighting Research and Technology, 19(3), 73-79.

Amadei and Pan 1992
Amadei, B., and Pan, E. 1992. "Gravitational Stresses in Anisotropic Rock Masses with Inclined Strata," *Int. J. Rock Mech. Min. Sci. & Geomech.,* Abstr., Vol. 29:225-236.

Amadei, Swolfs, and Savage 1988
Amadei, B., Swolfs, H. S., and Savage, W. Z. 1988. "Gravity-Induced Stresses in Stratified Rock Masses: *Rock Mechanics and Rock Engineering, 21: 1-20.*

American Society of Civil Engineers 1991
American Society of Civil Engineers. 1991. "Avoiding and Resolving Disputes during Construction."

American Society of Civil Engineers 1993
American Society of Civil Engineers. 1993. "Steel Penstocks" Manual on Engineering Practice No. 79, NY.

American Society of Civil Engineers 1994
American Society of Civil Engineers. 1994, "Avoiding and Resolving Disputes during Construction," ASCE Technical Committee on Contracting Practices of the Underground Technology Research Council, ASCE, NY.

Amstutz 1970
Amstutz, I. E. 1970. "Buckling of Pressure-Shafts and Tunnel Linings," *Water Power.*

Anderson and Richards 1987
Anderson, M. G., and Richards, K. S. 1987. *Slope Stability - Geotechnical Engineering and Geomorphology.* John Wiley and Sons, New York.

Andreis and Valent 1993
Andreis, I., and Valent, G. 1993. "Yindaruqin Irrigation Project: High Speed Tunneling in China;" RETC Proceedings: 383-399.

Annett and Stewart 1991
Annett, M. F., and Stewart, J. 1991. "Development of Grouting Methods for Channel Tunnel United Kingdom Segmental Liner," Tunneling '91:173-179.

Anonymous 1977
Anonymous. 1977. "Precast Segments Line Bored Tunnel," *California Builder & Engineer,* September. (Buckskin Mt. Project, Arizona)

Anonymous 1980
Anonymous. 1980. "Precast Liner Keeps Diversion Tunnel on Track," *Highway & Heavy Construction,* June. (Park River Diversion Tunnel, Hartford, Connecticut)

ANSI/IES 1987
ANSI/IES RP-22 1987 *American National Standard Practice for Tunnel Lighting.*

Aristorenus 1992
Aristorenus, G. 1992. "Time-Dependent Behavior of Tunnels Excavated in Shale," Ph.D. dissertation, Department of Civil Engineering, Massachusetts Institute of Technology, Cambridge, MA: 337.

ASHRAE Handbook 1989
ASHRAE Handbook. 1989. Fundamentals I-P Edition, American Society of Heating Refrigeration and Air Conditioning Engineers, Inc.

ASME Boiler and Pressure Vessel Code
ASME Boiler and Pressure Vessel Code, Section VIII, Division 1, Pressure Vessels.

Associated Engineers, JV 1980
Associated Engineers, a JV of Parsons Brinckerhoff Quade & Douglas, Inc., De Leuw Cather and Company, and Kaiser Engineers 1980 *Subway Environmental Design Handbook, Volume II, Subway Environment Simulation (SES) Computer Program, Version3.0, Part* 1: *User's Manual,* prepared for the Transportation Systems Center of U.S.D.O.T., November.

Associated Engineers, JV 1980
Associated Engineers, a Joint Venture of Parsons Brinckerhoff Quade & Douglas, Inc., De Leuw Cather and Company and Kaiser Engineers 1976 *Subway Environmental Design Handbook, Volume* 1, *Principles and Applications,* Second Edition, National Information Service No. PB-254-788.

Association Francaise des Travaux en Souterrain 1991
Association Francaise des Travaux en Souterrain. 1991. "Recommendations on Grouting for Underground Works," *Tunneling and Underground Space Technology,* Vol. 6, No. 4:383-462

ASTM C 1240
ASTM C 1240 "Standard Specification for Silica Fume for Use in Hydraulic Cement Concrete and Mortar."

ASTM A 820
ASTM A 820 "Standard Specification for Steel Fibers for Steel Fiber-Reinforced Concrete."

ASTM C 1116-91
ASTM C 1116-91 "Standard Specification for Fiber-Reinforced Concrete and Shotcrete."

ASTM C 1018-92
ASTM C 1018-92 "Standard Test Method for Flexural Toughness and First-Crack Strength of Fiber-Reinforced Concrete."

Australasian Fire Authorities Council 2001
Australasian Fire Authorities Council 2001 "*Fire Safety Guidelines for Road Tunnels*" AFAC Ltd., Australia.

Baker 1992
Baker,W. H., ed. (1992). *Grouting in Geotechnical Engineering. N*ew York: American Society of Civil Engineers.

Bamford 1984
Bamford, W. E. 1984. "Rock Test Indices Are Being Successfully Correlated with Tunnel Boring Machine Performance," *Proceedings, 5th Australian Tunneling Conference, Melbourne*, October, Vol. 2: 19-22.

Barton 1988
Barton, N. 1988. "Rock Mass Classification and Tunnel Reinforcement Selection Using the Q-System," ASTM STP 984, Rock Classification Systems for Engineering Purposes.

Barton, Lien, and Lunde 1974
Barton, N., Lien, R., and Lunde, J. 1974. "Engineering Classification of Rock Masses for the Design of Tunnel Support" *Rock Mechanics,* Vol. **6, No. 4.**

Bathe 1982
Bathe, K-J. 1982. *Finite Element Procedures in Engineering Analysis.* Prentice-Hall: 735.

Beavis 1985
Beavis, F. C. 1985. *Engineering Geology.* Blackwell Scientific Publications.

Beldwald 1992
Beldwald, P. 1992. "A Contribution to the Design of Tunnels in Argillaceous Rock; Ph.D. dissertation, Department of Civil Engineering, Massachusetts Institute of Technology, Cambridge, MA: 427.

Berge, Wang and Bonner 1993
Berge, P. A., Wang, H. F., and Bonner, B. P. 1993. "Pore Pressure Buildup Coefficient in Synthetic and Natural Sandstones," *Int. J. Rock Mech. Min. Sci. & Geomech.,* Abstr., Vol. 30, No. 7:1135-1141.

Bickel, Kuesel and King 1996
Bickel, Kuesel and King, 2nd ed. "Tunnel Engineering Handbook"; Chapman & Hall, N.Y.

Bieniawski 1979
Bieniawski, Z. T. 1979. "The Geomechanics Classification in Rock Engineering Applications," *Proceedings, 4th International Congress on Rock Mechanics, ISRM,* Montreux. A. A. Balkema, Rotterdam, Vol. 2:41-48.

Blanck 1969
Blanck, lA. (1969) The Balboa Outlet Tunnel Monorock Publication.

Blaster's Handbook 1980
Blaster's Handbook, 16th ed. 1980. E. I. DuPont de Nemours, Wilmington, DE. (Later editions may be available)

Bonilla., Mark, and Lienkaemper. 1984
Bonilla, M.G., R. K. Mark, and J. J. Lienkaemper. (1984). Statistical relations among fault displacement. *Bulletin of the Seismological Society of America,* 74.

Brady, Bhore, Gordon and Honeycutt 1985
Brady, J.J. Bhore, J.S., Gordon, R.B., and Honeycutt, J.W. 1985 "Practical Methods of Shallow Shaft Sinking," *Proceedings of Rapid Excavation and Tunneling Conference, June 16-20,* New York.

Brekke and Ripley 1993
Brekke, T. L., and Ripley, B. D. 1993. "Design of Pressure Tunnels and Shafts," Chapter 14 of *Comprehensive Rock Engineering* - Vol. 2, J. A. Hudson, cd.: 349-369.

British Highway Agency 1999
British Highway Agency 1999 "*Design of Road Tunnels*" Design Manual for Roads and Bridges, vol. 2, Section 2 Part 9, BD 78/99.

BTS and ICE 2004
British Tunnelling Society (BTS) and Institution of Civil Engineers (ICE) 2004; "*Tunnel Lining Design Guide*", Thomas Telford Ltd., March

Brockenbrough and Johnston 1974
Brockenbrough, R.L., and Johnston, B.G. 1974 *U.S.S. Steel Design Manual.*

Broms and Bennermark 1967
Broms, B.B. and H. Bennermark. (1967). Stability of clay at vertical openings. *Journal of the Geotechnical Division* 3.

Brown 1981
Brown, E. T. 1981. "Rock Characterization Testing and Monitoring: ISRM Suggested Methods, published for the *Commission on Testing Methods, International Society for*

Rock Mechanics by Pergammon Press.

Brown, Bray, Ladanyi, and Hock 1983
Brown, E. T., Bray, J. W., Ladanyi, B., and Hock, E. 1983. "Ground Response Curves for Rock Tunnels, Journal of Geotechnical Engineering," Vol. 109, No. 1, *American Society of Civil Engineering.*

Cassinelli, Cina, Innaurato, Mancini, Smapaolo 1982
Cassinelli, F., Cina, S., Innaurato, N., Mancini, R., and Smapaolo, A. 1982. "Power Consumption and Metal Wear in Tunnel Boring Machines: Analysis of Tunnel-Boring Operations in Hard Rock," Proceedings, *Tunnelling* '82, London, IMM 73-81.

Chabannes 1982
Chabannes, C. R. 1982. "An Evaluation of the Time-Dependent Behavior of Solution Mined Caverns in Salt for the Storage of Natural Gas," M.S. thesis, Pennsylvania State University.

Cecil (ca. 1970)
Cecil, O.S. (ca. 1970) "Site Inspection at Tehachapi Mountains Crossing of the California Aqueduct, Tunnel No.1, North Portal."

Chaiken, RE, Singer, J.M., and Lee, C.K. 1979
Chaiken, RE, Singer, J.M., and Lee, C.K. 1979 *Model Coal Tunnel Fires in Ventilation Flow,* U. S. Bureau of Mines Report of Investigations, Rl 8355.

Cheng, Abousleiman, and Roegiers 1993
Cheng, A. H-D., Abousleiman, Y., and Roegiers, J. C. 1993. "Review of Some Poroelastic Effects in Rock Mechanics," *Int. J. Rock Mech. Min. Sci. & Geomech.,* Abstr., Vol. 30, No. 7:1119-1126.

CIE 1990
Commission Intemationale de I'Eclainage (CIE) 1990 *Guide for the Lighting of Road Tunnels and Underpasses,* Publication, CIE 53-1990 CIE Central Bureau, Vienna, Austria.

Clayton, Simons, and Matthews 1982
Clayton, C. R. I., Simons, N. E., and Matthews, H. C. 1982. *Site [investigation, A Handbook for Engineers,* Halstead Press.

Cording and Hansmire 1975
Cording, E. J., and W. H. Hansmire. (1975). Displacements around soft ground tunnels. *Proceedings, Fifth Panamerican Congress on Soil Mechanics and Foundation Engineering,* Buenos Aires.

Croce, P.A., et al. 1978
Croce, P.A., et al. 1978 *A Full-Scale Investigation of the Fuel-Load Hazard of Timber Sets in Mines,* Second Annual Report, No: RC 78-T-6, Factory Mutual Research Corporation, Norwood, MA.

Critchfield 1985
Critchfield, J. W. 1985. Tunneling in Gassy Ground," Proceedings, RETC, New York, AIME: 441-461.

Culverwell 1989
Culverwell, D.R. 1989 "Comparative merits of steel and concrete forms of tunnel," Proceedings of the Immersed Tunnel Techniques Symposium, Manchester, UK.

Cundall 1976
Cundall, P. A. 1976. "Explicit Finite Difference Methods in Geomechanics, Numerical Methods in Engineering," Proceedings of the EF Conference on Numerical Methods in Geomechanics, Blacksburg, Virginia. Vol. 1: 132-150.

Cundall and Hart 1993
Cundall, P. A., and Hart, R. D. 1993. "Numerical Modeling of Discontinuities" *Comprehensive Rock Engineering,* Vol. 2, J. A. Hudson, ML, Pergammon Press: 231-243.

Deere 1968
Deere, D. U. 1968. "Geologic Considerations," Chapter 1 of *Rock Mechanics in Engineering Practice,* K. G. Stagg and O. C. Zienkiewicz, cd., Wiley, New York.

Deere and Deere 1988
Deere, D. U., and Deere, D. W. 1988. "The Rock Quality Designation (RQD) Index in Practice, in Rock Classification Systems for Engineering Purposes," L. Kirkaldie, cd., ASTM 1984.

Deere, Hendron, Patton, and Cording 1967
Deere, D. U., Hendron, A. J., Patton, F. D., and Cording, E. J. 1967. "Design of Surface and Near-Surface Construction in Rock, in Failure and Breakage of Rock," C. Fairhurst, cd., Society of Mining Engineers of AIME, New York.

Deere, Peck, Monsees, and Schmidt 1969
Deere, D. U., Peck, R. B., Monsees, J. E., and Schmidt, B. 1969. "Design of Tunnel Liners and Support Systems," Report to UMTA, DOT, available through NTIS.

Deere, Peck, Parker, Monsees, and Schmidt 1970
Deere, D. U., Peck, R. B., Parker, H. W., Monsees, J. E., and Schmidt, B. 1970. "Design of Tunnel Support Systems": *Highway Res. Rec. No. 339:26-33.*

Deix and Braun. 1987
Deix, E, and B. Braun. (1987). The use of NATM in combination with compressed air and ground freezing during Vienna subway construction. *Proceedings, Rapid Excavation and Tunneling Conference,* Littleton, CO: Society of Mining Engineers Inc.

Dijon and Winkin 1990
Dijon J.M., and Winkin, PH. 1990 *Tunnel Lighting. Symmetrical, Counter Bean and Pro Beam-Comparison and Tests,* Symposium and Visibility, National Research Council, Washington, D.C., July.

Dolcini, Grandori, and Marconi 1990
Dolcini, G., Grandori, R., and Marconi, M. 1990. "Water Supply Revamp for Bogota: *Tunnels & Tunnelling, September*, 22(9): 33-38. (Los Resales Water Tunnel)

Dowding 1985
Dowding, C. H. 1985. *Blast Vibration Monitoring and Control,* Prentice Hall.

Dunniciiff, 1988
Dunnicliff, J. 1988. *Geotechnical Instrumentation for Monitoring Field Performance,* Wiley, New York: 577.

Einstein 1989
Einstein, H.H. 1989. Design and analysis of underground structures in swelling and squeezing rocks (Chapter 6). In *Underground Structures-Design and Instrumentation,* R.S. Sinha, ed. New York: Elsevier.

Electric Power Research Institute (EPRI) 1987
Electric Power Research Institute (EPRI). 1987. "Design Guidelines for Pressure Tunnels and Shafts," Palo Alto, California.

Engels, Cahill, and Blackey 1981
Engels, J. G., Cahill, J. T., and Blackey, E. A., Jr. 1981. "Geotechnical Performance of a Large Machine-Bored Precast Concrete Lined Tunnel," 1981 *RETC Proceedings*: 1510-1533. (Park River Diversion Tunnel, Hartford, Connecticut)

Eusebio, GrasSo, Mahtab, and Innaurato 1991
Eusebio, A., Grasso, P., Mahtab, A., and Innaurato, A. 1991. "Rock Characterization for Selection of a TBM for a Railway Tunnel near Geneva, Italy," Proceedings, *Int. Symp. on Mine Mech. and Automation*, CSM/USBM, Vol. 1:4-25 to 4-35.

Farmer 1%8
Farmer, I. W. 1968. *Engineering Properties of Rocks,* Spon Ltd.

Farmer and Glossop 1980
Farmer, I. W., and Glossop, N. H. 1980. "Mechanics of Disc Cutter Penetration," *Tunnels and Tunnelling,* Vol. 12, No. 622-25.

Faucett 1969
Faucett, .E. 1969 "The Zonal Cavity System Applied to Tunnels," Illuminating Engineering Society National Conference, August.

Federal Highway Administration
Federal Highway Administration "*Prevention and Control of Highway Tunnel Fires*" FHWA–RD-83-032.

Fernandez and Alvarez 1994
Fernandez, G., and Alvarez, T. A. 1994. "Seepage-Induced Effective Stresses and Water Pressures around Pressure Tunnels," *Journal of Geotechnical Engineering,* American Society of Civil Engineers.

Fezlmyr, A.H. 1976
Fezlmyr, A.H. 1976 "Research in Austria on tunnel fire," BHRA, Second International Symposium on the Aerodynamics and Ventilation of Vehicle Tunnels, March 23-25, Paper 12, Cambridge, England.

FIP 1986
FIP. 1986. *Corrosion and Corrosion Protection of Prestressed Ground Anchorages,* Thomas Telford Ltd.

Fliigge 1960
Fliigge, W. 1960. *Stresses in Shells,* Springer-Verlag, Berlin.

Garshol 1983
Garshol, K. 1983. Excavation support and pre-grouting of TBM-driven sewer tunnel, Norwegian Tunnelling Technology Publication No.2, Tapir.

Goldberg, Jaworsky and Gordon 1976
Goldberg, D.T., W.E. Jaworsky, and M.P. Gordon 1976 *Lateral Support Systems and Underpinning,* U.S. Department of Transportation, Report No. FWHA-RD-75-128, Vo. I, April, 1976.

Goodman and Shi 1985
Goodman, R. E., and Shi, G. H. 1985. *Block Theory and its Application to Rock Engineering,* Prentice-Hall, New Jersey.

Goodman 1995
Goodman, R.E. 1995. Block theory and its applications-the 1995 Rankine Lecture. *Geotechnique.* In press.

Graham 1976
Graham, P. C. 1976. "Rock Exploration for Machine Manufacturers," in Exploration for Rock Engineering, Proceedings of the Symposium, Johannesburg, Z. T. Bieniawski, cd., Balkema, Vol. 1: 173-180.

Grandori, Dolcini, and Antonini 1991
Grandori, R., Dolcini, G., and Antonini, F. 1991. "The Resales Water Tunnel in Bogota," *Proceedings, Rapid Excavation and Tunneling Conference*, Seattle: 561-581.

Greuer 1973
Greuer, R.E. 1973 *Influence of Mine Fires on the Ventilation of Underground Mines,* U.S. Bureau of Mines Open Fire Report 74-73, July (NTIS: PB-225-834).

Groseclose and Schoeman 1987
Groseclose, W. R., and Schoeman, K. D. 1987. "Precast Segment Lining for Buckskin Mountains Water Conveyance Tunnel," R. J. Robbins and R. J. Conlon, cd., 1976 *RETC Proceedings,* Las Vegas, Nevada: 448-463.

Grant, Christian, and Vanmarke 1981
Grant, R., J. T. Christian, and E. H. Vanmarke (1981). Differential settlement of buildings, *Journal of Geotechnical Engineering, 107,* American Society of Civil Engineers.

Greuer 1977
Greuer, R.E. 1977 *Study of Mine Fires. Part* 1. *Computer Simulation of Ventilation Systems Under the Influence of Mine Fires,* U.S. Bureau of Mines Open File Report 115(1)-78, October (NTIS: PB 2882311AS).

Gularte, Taylor, Monsees and Whyte 1991
Gularte, Taylor, Monsees and Whyte 1991, "Tunneling performance of chemically grouted alluvium landfill - Los Angeles Metro Rail Contract A-130, *Proceedings, Rapid Excavation and Tunneling Conference,* Littleton, CO Society of Mining Engineers, Inc. .

Gularte 1982
Gularte, F. B. (1982). Grouting Practice for Shafts, Tunnels, and Underground Excavations", Short Course Notes, University of Wisconsin-Milwaukee.

Gularte 1989
Gularte, F. B. (1989). Grouting Practice for Shafts, Tunnels, and Underground Excavations", Short Course Notes, University of Wisconsin-Milwaukee.

Hammond 1959
Hammond, R. 1959 *Tunnel Engineering.* Macmillan, New York.

Harris 1983
Harris, F.C 1983 *Ground Engineering Equipment and Methods,* McGraw-Hill, New York.

Hartmann, Mutmansky, and Wang 1982
Hartmann, H. L., Mutmansky, J. M., and Wang, Y. I., ed. 1982. *Mine Ventilation and Air Conditioning,* 2nd. Ed., Wiley.

Hashash and Cook 1994
Hashash, Y. M. A., and Cook, R. F. 1994. "Effective Stress Analysis of Supercollider Tunnels," 8th *Int. Conf. Assoc. Comp. Methods and Advances in Rock Mechanics,* Morgantown, West Virginia.

Hatzor and Goodman 1993
Hatzor, Y., and Goodman, R. E. 1993. "Determination of the 'Design Block' for Tunnel Supports in Highly Jointed Rock *Comprehensive Rock Engineering,* Vol. 2, J. A. Hudson, cd., Pergammon Press: 263-292.

Havers and Stubbs 1971
Havers, J.A., and Stubbs, F.W. JR. 1971 *Handbook of Heavy Construction.* McGraw-Hill, New York.

Hemphill 1990
Hemphill, G. B. 1990. "Mechanical Excavation System: Selection, Design, and Performance in Weak Reek; Ph.D. dissertation, University of Idaho, Moscow: 361.

Heselden 1976
Heselden, A.J.M. 1976 "Studies of fire and smoke behaviour relevant to tunnels," BHRA, Second International Symposium on the Aerodynamics and Ventilation of Vehicle Tunnels, March 23-25, Paper 11, Cambridge, England.

Heuer and Virgens 1987
Heuer, R.E., and D. L. Virgens. (1987). Anticipated behavior of silty sands in tunneling. *Proceedings, Rapid Excavation and Tunneling Conference,* Littleton, co: Society of Mining Engineers, Inc.

Heuer 1974
Heuer, R.E. (1974). Important ground parameters in soft ground tunneling. *Proceedings of Specialty Conference on Subsurface Exploration for Underground Excavation and Heavy Construction, New York: ASCE.*

Hitachi Zosen 1984
Hitachi Zosen 1984. *Hitachi Zosen's Shield Tunneling Machines,* Company Brochure, Tokyo.

Hitachi Zosen 1984
Hitachi Zosen 1981. "Shield Tunneling Machines", Company Brochure, Tokyo.

Hoeking 1978
Hocking, G. 1978. "Stresses around Tunnel Intersections," in *Computer Methods in Tunnel Design,* Institution of Civil Engineers: 41-59.

Hock and Brown 1980
Hoek, G. E., and Brown, E. T. 1980. "Underground Excavations in Rock," *Institution of Mining and Metallurgy,* London, England: 527.

Hoek and Brown 1988
Hoek, G E., and Brown, E. T. 1988. "The Hoek-Brown Failure Criterion - A 1988 Update: Proceedings, 15th *Canadian Rock Mech. Symposium,* Toronto: 3-38.

Hughes 1986
Hughes, H. M. 1986. 'The Relative Cuttability of Coal Measures Rock," *Mining Science and Technology,* Vol. 3: 95-109.

Huval 1969
Huval, C. J. 1969. "Hydraulic Design of Unlined Rock Tunnels," *Journal of the Hydraulics Division,* Proceedings of the American Society of Civil Engineers, Vol. HY4.

Hwang and Chaiken 1987
Hwang, C.C., and Chaiken, RE 1987 *Effect of Duct Fire on the Ventilation Air Velocity,* U.S. Bureau of Mines Report of Investigation No. 8311.

IES 1990
Illuminating Engineering Society 1990 *IES Lighting Handbook,* New York.

IHI 2003
Ishikawajima-Harima Heavy Industries Co. Ltd. (IHI), 2003 "*PR Documents of IHI's Shield Machine*", Tokyo, Japan.

International Tunneling Association 1997
International Tunneling Association 1997 Immersed and Floating Tunnels State of the Art Report, Working Group

No. 11., *Tunneling and Underground Space Technology*, Pergamon Press, Vol. 12, No.2 (April).

IRS
Internal Revenue Service Regulations, 26 CFR 181 Commerce in Explosives, Washington, DC.

ISRM 1982
ISRM. 1982. International Society for Rock Mechanics, ISRM Suggested Methods: Rock Characterization, Testing and Monitoring (E. T. Brown, cd.), Pergammon Press, Oxford.

ITASCA 1992
ITASCA. 1992. *Fast Lagrangian Analysis of Continua,* Version 3.2, User's Manual, Vol. III.

Jackson 1983
Jackson, L.E. 1983 "Serious tunnel fires with emphasis on the Caldecott Tunnel fire, Oakland, California, April 7, 1982," presented to the Transportation Research Board Committee A2604, Tunnels and Underground Structures, January 29.

Jacobsen 1974
Jacobsen, S. 1974. "Buckling of Circular Rings and Cylindrical Tubes under External Pressure," *Water Power.*

Jaeger 1964
Jaeger, J. C. 1964. *Elasticity, Fracture and Flow with Engineering and Geological Applications,* Chapman & Hall, London.

JSCE 1996
Japanese Society of Civil Engineers (JSCE) 1996 "Japanese Standard for Shield Tunneling" Working Group for Shield Tunneling; Subcommittee on English Edition of the Japanese Standard for Tunneling.

Jessberger 1979
Jessberger, H.L. 1979 *Ground Freezing, Developments in Geotechnical Engineering,* Vol. 26. Elsevier Scientific Publishing Company, New York.

Judd and Huber 1961
Judd, W. R., and Huber, C. 1961. *Correlation of Rock Properties by Statistical Means,* International Society on Mining Research, G. Clarke, cd., Pergammon, Oxford.

Jumikis 1971
Jumikis, A.R. 1971 *Foundation Engineering.* Intext, Scranton, Pa.

Karlsson and Fryk 1963
Karlsson, L., and Fryk, J.O. (1963) "Lining for the Intake Water Tunnel of the Holjes Hydroelectric Plant in Sweden," *Hochund Tiefbau,* Vol. 50.

Karol 1990
Karol, R. H. 1990. *Chemical Grouting,* second edition, New York: Marcel Dekker, Inc.

Kawamura et al. 1976
Kawamura, H., et al. 1976 "Study on a new ventilation system to effectively eliminate fire smoke in a tunnel," BHRA, Second International Symposium on the Aerodynamics and Ventilation of Vehicle Tunnels, March 23-25, Cambridge, England.

Keifer 1966
Keifer, O. (1966) *Multiple Layer Shotcrete Lining.* ACI Publications, SP-14.

Kessler and Moore 1999
Kessler, P.N and Moore, C.J. 1999; "Tunneling by Tunnel Boring Machine (TBM)".

Ketvertis 1971
Ketvertis, A. 1971 Foundation of Canada Engineering Corps.

Ketvertis 1989
Ketvertis, A. 1989 "Directional Light Application in Vehicular Tunnel Illumination Design," Illuminating Engineering Society National Conference, 1989.

Korbin 1979
Korbin, G. E. 1979. "Factors Influencing the Performance of Full-Face Hard Rock Tunnel Boring Machines," Report to USDOT, UMTA-CA-06-0122-79- 1.

Kuesel 1986
Kuesel, T. 1986 *"Immersed Tube Tunnels: Concept Design and Construction,"* Civil Engineering Practice, Boston Society of Civil Engineers, Spring.

Kuesel 1969
Kuesel, T. R. 1969. Earthquake design criteria for subways. *Journal of the Structural Division,* 95, ST6.

Lama and Vutukuri 1978
Lam~ R. D., and Vutukuri, V. S. 1978. *Handbook on Mechanical Properties of Rocks,* Vol. II, Trans Tech PubI., Switzerland.

Lane and Garfield 1972
Lane, K., and Garfield, L.A. 1972 *Proceedings of First North American Rapid Excavation and Tunneling Conference, Chicago, Illinois, June* 5-7,1972. Port City Press, Baltimore.

Lang 1961
Lang, T. A. 1961. "Theory and Practice of Rock bolting," *Trans. Amer. Inst. Mining Engrs.*, Vol. 220 333-348.

Lang and Bischoff 1982
Lang, T. A., and Bischoff, J. A. 1982. "Stabilization of Rock Excavations Using Rock Reinforcement," Proceedings, 23rd *U.S. Symposium on Rock Mechanics*, AIME, New York: 935-944.

Langefors and Kihlstrom 1978
Langefors, V., and Kihlstrom, B. 1978. *The Modern Technique of Rock Blasting,* Halsted Press, a division of Wiley.

Lauffer 1958
Lauffer, H. 1958. *Gebirgsklassljizierung fur den Stollenbau, Geologic und Bauwesen,* Vol. 24, No. 1:46-51.

Lawrence 1982
Lawrence, DLJ. (1982) "Shotcrete Lining for a Tunnel Requiring Ground Freezing for Initial Support," *Shotcrete IV,* pp. 155-170.

Lee, Chaiken and Singer 1979b
Lee, C.K., Chaiken, R.E, and Singer, J.M. 1979b "Interaction between duct fires and ventilation flow: An experimental study," *Combustion Science and Technology 20,* 59-72.

Lee, Singer and Chaiken 1979a
Lee, C.K., Singer, J.M., and Chaiken, R.E 1979a "Influence of passageway fires on ventilation flows," Second International Mine Ventilation Congress, Reno, Nevada, November 4-8.

Leonards 1962
Leonards, G. 1962 *Foundation Engineering.* McGraw-Hill, New York.

Little 1989
Little, T. E. 1989. "Construction and Performance of a Large Diameter Test Chamber in Shale," Proceedings, *International Tunneling Association Meeting*, Toronto: 869-876.

Lo and Yuen 1981
Lo, A. Y., and Yuen, C. M. K. 1981. "Design of Tunnel Lining in Rock for Long-term Time Effect," *Can. Geotech. J. Vol.* 18: 24-39.

Maidl and Handke 1993
Maidl, B., and Handke, D. 1993. "Overcoming a Collapse in the Karawanken Tunnel," *Tunnels and Tunnelling: 30-32.*

Mason 1968
Mason, RE. (1968)"The Function of Shotcrete in Support and Lining in the Vancouver R.R. Tunnel," *Tunnel and Shaft Conference,* University of Minnesota.

Matsumoto 1991
Matsumoto, Y. and Nishioka, T. 1991 "*Theoretical Tunnel Mechanics*" University of Tokyo Press.

Mayo, Adair and Jenny 1968
Mayo, R.S., Adair, T., and Jenny, R.I. 1968 *Tunneling: The State of the Art.* U.S. Department of Housing and Urban Development.

Megaw and Bartlett 1982
Megaw, T.M. and Bartlett, J.V. 1982, Tunnels: Planning, Design, Construction, vol. 2. Ellis Horwood Ltd., West Sussex, England.

McCusker 1982
McCusker, T.G. 1982. Soft ground tunneling. Chapter 5 in *Tunnel Engineering Handbook,* J.O. Bickel and T. R Kuesel, eds., New York: Van Hostrand Reinhold.

McFeat-Smith and Askildsrud 1993
McFeat-Smith, I., and Askildsrud, O. G. 1993. "Tunnel Boring Machine in Hong Kong," *RETC Proceedings*: 401413.

McWilliams and Erickson 1960
McWilliams, J.R., and Erickson, E.G. 1960 *Methods and Cost of Shaft Sinking in the Coeur D'Alene District, Shoshone County, Idaho.*U.S. Department of Interior.

Merritt 1968
Merritt, F.S. 1968 *Standard Handbook for Civil Engineers.* McGraw-Hill, New York.

Metro Rail Transit Consultants 1984
Metro Rail Transit Consultants 1984. Supplemental Criteria for Seismic Design of Underground Structures, SCRTD, Los Angeles.

Mindlin 1939
Mindlin, R. D. 1939. "Stress Distribution around a Tunnel", *American Society of Civil Engineers*, New York.

Miner and Hendricks 1969
Miner, G.M., and Hendricks R.S. (1969) "Shotcreting at Hecla Mining," *Rapid Excavation Symposium,* Sacramento, California.

Mitchell J. K. 1981
Mitchell, J. K. 1981. State-of-the-art report on soil improvement, *Tenth International Conference on Soil Mechanics and Foundation Engineering,* Stockholm.

Mitchell and Villet 1987
Mitchell, J.K, and CB. Villet 1987 *Reinforcement of Earth Slopes and Embankments,* Transportation Research Board, NCHRP Report 290.

Mizutani 1982
Mizutani, T. 1982 *Experiment of Vehicular Tunnel Fires,* Office of Highway Tunnel Research, Inst. of Civil Eng. Research, Department of Construction, Japan, February.

Monsees and Merritt 1991
Monsees, 1. E., and J. L. Merritt 1991. Earthquake considerations in design of the Los Angeles Metro, in Lifeline Earthquake Engineering, M.A. Cassuro, ed., New York: ASCE.

Moore 1960
Moore, E. T. 1960. "Designing Steel Tunnel Liners for Hydro Plants," *Hydro Review.*

Morgan 1991
Morgan, D. R. 1991. "Steel Fiber Reinforced Shotcrete for Support of Underground Openings in Canada," Con*crete International, Nov: 56-64.*

National Association of Corrosion Engineers International 1988
National Association of Corrosion Engineers International. 1988. Recommended Practice, Control of External Corrosion of Submerged Metallic Piping Systems (RP-01-69).

National Public Works Department 1993
National Public Works Department 1993 *"Underground Transport Connections (Rijkswaterstuat)."*

NAVFAC 1974
NAVFAC 1974 *Design Manual-Soil Mechanics, Foundations, and Earth Structures,* NAVFAC DM-7, U.S. NavaL Publications and Forms Center, March, Change 2.

Nelson 1993
Nelson, P. P. 1993. "TBM Performance with Reference to Rock Properties," Chapter 10, Vol. 4, *Comprehensive Rock Engineering,* J. A. Hudson, cd., Pergarnmon Press: 261-291.

Nelson 1983
Nelson, P. P. 1983. "Tunnel Boring Machine Performance in Sedimentary Rocks," Ph.D. dissertation, Cornell University: 448.

New York State Industrial Code, Albany, NY.

New Jersey Department of Labor and Industry, Safety Regulations, Trenton, NJ.

NFPA 1990
National Fire Protection Association (NFPA) 1990 Standard NFPA 130 *"Fixed Guideway Transit Systems".*

NFPA 2001
National Fire Protection Association (NFPA) 2001 Standard NFPA 502 *"Standard for Road Tunnels, Bridges and Other Limited Access Highways".*

NTH (Norwegian Institute of Technology) 1988
NTH (Norwegian Institute of Technology). 1988. "Hard Reek Tunnel Boring: Project Report 1-88, Trondheim, Norway 183.

Nyman et al. 1984
Nyman, D. J., et al. 1984. *Guidelines for the seismic design of oil and gas pipeline systems.* ASCE Technical Council on Lifeline Earthquake Engineering, New York: ASCE.

Obert and Duvall 1967
Obert, Z L., and Duvall, W. I. 1967. *Rock Mechanics and the Design of Structures in Rock,* John Wiley and Sons.

Occupational Safety and Health Administration, Safety and Health Standards, Washington, DC.

[Offenegg Tunnel] 1965
[Offenegg Tunnel] 1965 *Final Report of the Tests on the Offenegg Tunnel from May* 17-31, 1965, Commission for Safety Measures in Road Tunnels. (Two Volumes-In German)

Oriard 1982
Oriard, L. L. 1982. *Blasting Effects and Their Control, in Underground Mining Methods Handbook,* Hustrulid, cd., AIME, Denver, CO.

O'Rourke 1984
O'Rourke, T.D. 1984 "Guidelines for Tunnel Lining Design" ASCE 1984.

Ozdemir and Wang 1979
Ozdemir, L., and Wang, F. 1979. "Mechanical Tunnel Boring, Prediction, and Machine Design," Final Report NSF/RA-790161: 204.

Palmer and Belshaw 1980
Palmer, J.H.L., and D. J. Belshaw, (1980). Deformations and pore pressures in the vicinity of a precast, segmented, concrete lined tunnel in clay. *Canadian Geotechnical Journal,* 17.

Palmer and Belshaw 1979
Palmer, 1.H.L., and D. 1. Belshaw 1979. Long-term performance of a machine-bored tunnel with use of an unreinforced, precast segmented concrete lining in soft clay, *Proceedings Tunnel* '79, London: Institution of Mining and Metallurgy.

Pan and Amadei 1993
Pan, E., and Amadei, B. 1993. "Gravitational Stresses in Long Asymmetric Ridges and Valleys in Anisotropic Reek," *Int. J. Rock Mech. Min. Sci. & Geomech.,* Abstr., Vol. 30 No. 7: 1005-1008.

Paris 1921
Paris, J.M. 1921 "Stress coefficients for large horizontal pipes," *Engineering News Record,* 87(19) (November 10).

Pariseau 1993
Pariseau, W. G. 1993. "Equivalent Properties of a Jointed Block Material," *[Int. J. Rock Mech. Min. Sci. & Geomech.,* Abstr., VO1.30, No. 7: 1151-1157.

Peck 1969
Peck, R B. 1969. Deep excavations and tunneling in soft ground. *State-of-the Art Volume, Seventh International Conference on Soil Mechanics and Foundations,* Mexico City.

Peck 1973
Peck, R. B. 1973. "Influence of Non-technical Factors on the Quality of Embankment Dams, Embankment Dam Engineering", *Casagrande Vol.,* Wiley, New York: 201-208. Reprinted in *Judgment in Geotechnical Engineering: The Professional Legacy of Ralph B. Peck,* J. Dunnicliff and D. U. Deere, cd., 1984. Wiley, New York: 137-144.

Peck 1984
Peck, R. B. 1984. "Observation and Instrumentation, Some Elementary Considerations," Postscript, in *Judgment in Geotechnical Engineering: The Professional Legacy of Ralph B. Peck,* J. Dunnicliff and D. U. Deere, cd., 1984. Wiley, New York: 128-130.

Peck 1988
Peck, R. B. 1988. Foreword to *Geotechnical [instrumentation for Monitoring Field Performance,* by John Dunnicliff,
Wiley, New York: vii-ix.

Pender 1980
Pender, M. J. 1980. "Elastic Solutions for a Deep Circular Tunnel," *Geotechnique.*

Permanent International Association of Road Congress(P1ARC) 1987 PIARC report.

Persson, Hoimberg, and Lee 1993
Persson, P. A., Holmberg, R., and Lee, J. 1993. Rock *Blasting and Explosives Engineering,* CRC Press.

Peterson, Nelson, Nelson, and Wagener 1991
Peterson, DL, C.R. Nelson, B.K. Nelson, and B.D. Wagener. 1991. Design and construction of the Lafayette Bluff Tunnel, *Proceedings RETC,* Seattle.

Phienwaja. 1987
Phienwaja, N. (1987). Ground response and support performance in a sheared shale, Stillwater Tunnel, Utah, Ph.D. Thesis, University of Illinois at Urbana-Champaign.

Phien-Wej and Cording 1991
Phien-Wej, N., and EJ. Cording.1991. *Sheared Shale Response to Deep TBM Excavation.* New York: Elsevier.

Polshin and Tokar 1957
Polshin, D.E., and Tokar, R.A. (1957). Maximum allowable non-uniform settlement of structures. *Proceedings 4th International Conference on Soil Mechanics and Foundation Engineering, Vol. I,* London.

Pona, Civil Consulting, Inc.
Pona, Civil Consulting, Inc., Sacramento, CA – "MathCad Applications for Determination of the Tunnel Steel Liner Critical Buckling Pressure."

Powers 1992
Powers, J. P. (1992). *Construction Dewatering-New Methods and Applications,* Second Edition, New York: John Wiley and Sons.

Powers 1981
Powers, J. P., Construction Dewatering-A Guide to Theory and Practice, John Wiley and Sons, New York, 1981.

Powers 1972
Powers, J.P. 1972 "Groundwater Control in Tunnel Construction," *Proceedings of North American Rapid Excavation and Tunneling Conference,* ASCE-AIME, New York.

Proctor and White 1977
Proctor, R.Y. and T. L. White (1977). *Earth Tunneling with Steel Supports,* Commercial Shearing, Inc., Youngstown, OH.

Procter and White 1946
Procter, R. V., and White, T. L. 1946. "Rock Tunneling with Steel Supports", The Commercial Shearing and Stamping Company, Ohio 1946, revised 1968, copyright 1946 by The Commercial Shearing and Stamping Company.

Quadrio (ca. 1964)
Quadrio, C.P. (ca. 1964) "New Methods for the Construction of Tunnels," II *Monitire Tecnico,* Vol. 1.

Rabcewicz 1964
Rabcewicz, L.V. (1964) "The New Austrian Tunneling Method," *Water Power.*

Rarjeat 1991
Rarjeat, P. E. (1991). Evolution of tunneling methods in Mexico during last 20 years. *Proceedings, Rapid Excavation and Tunneling Conference,* Littleton, CO: Society of Mining Engineers, Inc.

Rasmussen and Ronhild 1990
Rasmussen, N., and Ronhild, C.J. 1990 "Settlement of immersed CN tunnels," *Proceedings of the Second Symposium on Strait Crossings,* Norway.

Richardson and Mayo 1941
Richardson, H. W., and RS. Mayo (1941) *Practical Tunnel Driving.* New York: McGraw Hill.

Riley 1964
Riley, W. F. 1964. "Stresses at Tunnel Intersections," *Journal of the Mechanics Division, proceedings of the American Society of Civil Engineers.*

Romero 2002
Romero, V. 2002 "NATM in Soft Ground, a Contradiction of Terms?" World Tunnelling pp 338-342. September.

Ropkins 1998
Ropkins J.W.T. 1998. "Jacked Box Tunnel Design" *Proc Geo-Congress 98, Boston, ASCE Jacked Tunnel Design & Construction"* pp 21-38

Roark and Young 1975
Roark, R.J., and Young,W.C. 1975 *Formulas for Stress and Strain,* Fifth Edition, McGraw-Hill, New York.

Rotter 1960
Rotter, E. (1960) "Spiritzbeton und seine praktische Andwending, im Untertagebau," Symposium at Lesben, Austria.

Roxborough and Phillips 1975
Roxborough, F. F., and Phillips, H. R. 1975. "Rock Excavation by Disc Cutter," *Int. J. Rock Mech. Min. Sci.,* Vol. 12, No. 12: 361-366.

Royal Institution of Engineers and The Netherlands Tunnels 1987
Royal Institution of Engineers and The Netherlands Tunnels 1987 Immersed Tunnels Proceedings of Delta Tunneling Symposium, Amsterdam, November.

Salencon 1969
Salencon. 1969. "Contraction Quasi-Statique d'une Cavite Symetrique, Spherique ou Cylindrique dans un Milieu Elasto-plastique; *Annales des Ponts et Chaussees,* Vol. 4: 231-236.

Sanchez-Trejo 1985
Sanchez-Trejo, R. 1985. "Comparative Solutions of Shotcrete and Conventional Concrete Permanent Linings for Water Supply Tunnels", *Shotcrete for Underground Support IV,* Selected Papers from Conference, held in Paipa, Colombia, September 5-10, 1982, Published by Engineering Foundation, New York.

Schmidt 1979
Schmidt, B. (1979). Settlements and ground movements associated with tunneling in soil. Ph.D. Thesis, University of Illinois.

Schmidt and Grantz 1979
Schmidt, B., and Grantz, W. 1979 "Settlement of immersed tunnels," *Journal of the Geotechnical Division,* ASCE, September.

Schmitter and Morens 1983
Schmitter, J., and Morens, O. 1983. "Tunnel con Deformaciones Excesivas," *The Pan-american Conference on Soil Mech.*, Vancouver, B.C.

Schnabel Foundation Company 1982
Schnabel Foundation Company 1982 *Tiebacks,* U.S. Department of Transportation, Report No. FWHA/FD-82/047, July.

Schnabel 1982
Schnabel, H. 1982 *Tiebacks in Foundation Engineering and Construction,* McGraw-Hill, New York.

Schoeman 1987
Schoeman, K. D. 1987. "Buckskin Mountains Tunnel and Stillwater Tunnel: Developments in Technology." *Tunnelling and Underground Transport. Future Developments in Technology, Economics, and Policy.* F. P. Davidson, cd., Elsevier, New York 92-108.

Schorer 1933
Schorer, H. 1933 "Design of large pipe lines," *Trans. ASCE* 98.

Schreuder 1964
Schreuder, A. (1964) *The Lighting of Vehicular Tunnels,* Phillips Technical Library, Eindhoven, The Netherlands.

Schwartz, Azzouz, and Einstein 1980
Schwartz, C. W., Azzouz, A. S., and Einstein, H. H. 1980. "Improved Design of Tunnel Supports," U.S. Department of Transportation, Report No. UMTA-MA-06-0100-8 O-5.

Senthivel 1994
Senthivel,A. 1994. Report to the Board of Consultants for the Yacambu-Quibor Transfer Tunnel, November.

Serafin and Pereira 1983
Serafin, J. L., and Pereira, J. P. 1983. "Consideration of the Geomechanics Classification of Bieniawski," Proceedings, *Int. Symp. on Exploration for Rock Engineering.*

Sharp and Lawrence 1982
Sharp, J.C. and Lawrence, D.LJ. (1982) "Final Shotcrete Linings for an Underground Power Station in Argillaceous Rocks," *Shotcrete IV,* pp. 115-154.

Sharp and Ozdemir 1991
Sharp, W., and L. Ozdemir. 1991. "Computer Modeling for TBM Performance Prediction and Optimization," Proceedings, *Int. Symp. on Mine Mechanization and Automation,* CSM/USBM, Vol. 1:4-57 to 4-66.

Shotcrete for Ground Support 1976
Shotcrete for Ground Support (1976) *Proceedings of the Engineering Foundation Conference,* Easton, Maryland (October), ACI Publication SP-54. American Society of Civil Engineers and American Concrete Institute.

Shotcrete for Rock Support 1992
Shotcrete for Rock Support (1992) *Guidelines and Recommendations- A Compilation,* Draft Document (B. Malmberg), February, for the ITA WG Shotcrete Use.

Shotcrete for Underground Support III 1978
Shotcrete for Underground Support III (1978) Papers presented at the 1978 Engineering Foundation Conference, St. Anton am Arlberg, Austria (April). Engineering Foundation, New York.

Shotcrete for Underground Support IV 1982
Shotcrete for Underground Support IV (1982) Selected papers presented at the 1982 Engineering Foundation Conference, Paipa, Boyaca, Colombia (September). Engineering Foundation, New York.

Shotcrete for Underground Support V 1990
Shotcrete for Underground Support V (1990) Proceedings of the Engineering Foundation Conference, Uppsala, Sweden (June). American Society of Civil Engineers, New York.

Shotcrete for Underground Support VI 1993
Shotcrete for Underground Support VI (1993) Proceedings of the Engineering Foundation Conference, Niagara-on-the-Lake, Canada (May). American Society of Civil Engineers, New York.

Shotcrete for Underground Support VII 1995
Shotcrete for Underground Support VII (1995) Proceedings of the Engineering Foundation Conference, Seefeld, Austria (June).

Shuster 1985
Shuster, J.A. 1985 "Ground Freezing for Soft Ground Shaft Sinking," *Proceedings of Rapid Excavation and Tunneling Conference, June 16-20,* New York.

Siskind, Stagg, Kopp, and Dowding 1980
Siskind, D. E., Stagg, M. S., Kopp, J. W., and Dowding, C. H. 1980. "Structure Response and Damage Produced by Ground Vibration from Surface Mine Blasting," U.S. Bureau of Mines, Report of Investigation 8507.

Skempton and MacDonald 1956
Skempton, A.W., and D. H. MacDonald. 1956. The allowable settlements of buildings. *Proceedings, Institute of Civil Engineers, Part Ill,* London.

Skinner 1988
Skinner, E. H. 1988. "A Ground Support Prediction Concept: The Rock Structure Rating (RSR) Model," ASTM STP 984, L. Kirkaldie, ed.

Sloan 1981
Sloan, S. 1981. "Numerical Analysis of Incompressible and Plastic Solids Using Finite Elements," Ph.D. dissertation, Trinity College, Cambridge University, United Kingdom.

SME Mining Engineering Handbook 1992
SME Mining Engineering Handbook. 1992. Second Edition. H. L. Hartman, Senior Editor, *Society of Mining Engineers.*

Stack 1982
Stack, B. (1982). *Handbook of Mining and Tunneling Machinery,* New York: Wiley.

State of California, Department of Industrial Relations. Revised 1973
State of California, Department of Industrial Relations. Revised 1973. Subchapter 20, "Tunnel Safety Orders."

Stillborg 1986
Stillborg, B. 1986. *Professional Users Handbook for Rock Bolting.* TransTech Publications, Atlas Copco.

Stoss and Braun 1985
Stoss and Braun, B. 1985 "Sinking a Freeze Shaft with Installation of a Water-Tight, Flexible Lining," *Proceedings of Rapid Excavation and Tunneling Conference, June* 12-16, 1983, New York.

Swedish National Road Administration 1995
Swedish National Road Administration 1995, "*Tunnel 95*" SNRA Publication No. 1995:32E

Szechy 1966
Szechy, K. 1966 *The Art of Tunneling.* Akademiai Kiado, Budapest. *Use of Shotcrete for Underground Structural Support* 1974 ACI/ASCE, Detroit.

Tarkoy 1987
Tarkoy, P. J. 1987. "Practical Geotechnical and Engineering Properties for Tunnel-Boring Machine Performance Analysis and Prediction," Transportation Research Record, 1087, *Transportation Research Board*: 62-78.

Tateishi et al. 1970
Tateishi, S., et al. 1970 "Experiments on automobile fire in actual road tunnel," Annual Report of Roads, Japan Road Association, pp. 43-53.

Taylor and Winsor 1999
Taylor, S. and Winsor, 1998. "Developments in Tunnel Jacking" *Proc Geo-Congress 98, Boston, ASCE Jacked Tunnel Design & Construction"* pp 1-20

Technique fits tunnel to a tee. 1991. *Civil Engineering,* July 1991.

Teng 1962
Teng, W.C 1962 *Foundation Design,* Prentice-Hall, Inc., Englewood, NJ.

Terzaghi 1977
Terzaghi, K. (1977). Earth tunneling with steel supports. Commercial Shearing and Stamping Co., Youngstown, OH.

Terzaghi 1954
Terzaghi, K 1954 "Anchored Bulkheads," *Transactions,* ASCE, Vol. 119.

Terzaghi 1950
Terzaghi, K. (1950). Geologic aspects of soft ground tunneling. Chapter 11 in *Applied Sedimentation,* R. Task and D. Parker, eds. New York: John Wiley & Sons.

Terzaghi 1946
Terzaghi, K. 1946. "Rock Defects and Loads on Tunnel Supports" *Rock Tunneling with Steel Support,* R. V. Proctor and T. White, Commercial Shearing Co., Youngstown, OH: 15-99.

Terzaghi and Peck 1967
Terzaghi, K, and R.B. Peck 1967 *Soil Mechanics in Engineering Practice,* Second Edition, John Wiley and Sons, New York.

Terzaghi and Richart 1952
Terzaghi, K., and Richart, F. E. 1952. "Stresses in Reek About Cavities, *Geotechnique,* Vol. 3.

Thompson and Fanslor 1968
Thompson, J.A. and Fanslor, BL 1968 "Criteria for Highway Tunnel Lighting Design." *Public Roads,* 35(4)October.

Timoshenko 1936
Timoshenko, S. 1936. "Theory of Elastic Stability", McGraw-Hill Book Co., New York.

Timoshenko 1940
Timoshenko, S. 1940 *Theory of Plates and Shells,* McGraw-Hill, New York, Article 3, p. 15, Figure 9.

Tschebotarioff 1962
Tschebotarioff, G.P. 1962 "Retaining Structures," *Foundation Engineering,* edited by G.A. Leonards, McGraw-Hill, New York.

Unal 1983
Unal, E. 1983. "Design guidelines **and** roof control standards for coal mine roofs," Ph.D. thesis, Pennsylvania State University.

USACE 1982
USACE. 1982. "Proceedings of the Third International Symposium on Ground Freezing", U.S. Army Corps of Engineers, Cold Regions Research and Engineering Laboratory, Hanover, NH.

U.S. Department of the Army 1997
U.S. Department of the Army; Army Corps of Engineers 1997 "*Engineering and Design, Tunnels and Shafts in Rock*" EM 1110-2-2901, May.

USDOT 1984
U.S. Department of Transportation (USDOT) 1984 *Prevention and Control of Highway Tunnel Fires,* May.

USDOT, FHWA, AASHTO 2003
U.S. Department of Transportation (USDOT), Federal Highway Administration (FHWA) and American Association of State Highway and Transportation Officials (AASHTO) 2003 *Recommendations for Bridge and Tunnel Security,* September

U.S. Department of the Interior 1975
U.S. Department of the Interior 1975 Special Report, California Undersea Aqueduct, January 1975.

Use of Shotcrete for Underground Structural Support 1973
Use of Shotcrete for Underground Structural Support (1973) Proceedings of the Engineering Foundation Conference, South Berwick, Maine (July), ACI Publication SP-45. American Society of Civil Engineers and American Concrete Institute.

USNCTT (U.S. National Committee on Tunneling Technology) 1984
USNCTT (U.S. National Committee on Tunneling Technology). 1984. "Geotechnical Investigations for Underground Projects", National Academy Press, Washington, DC (2 volumes).

USS 1975
USS 1975 *Steel Sheet Piling Design Manual,* United States Steel, Pittsburgh, PA.

Vaughan 1956
Vaughan, E. W. 1956. "Steel Linings for Pressure Shafts in Solid Reek," Paper 949, *Journal Power Division,* Proceedings of the ASCE.

Venturini 1983
Venturini, W. S. 1983. "Boundary Elements Methods in Geomechanics, Lecture Notes in Engineering, 4". *C.* A. Brebia and S. A. Orszag, cd., Springer-Verlag, New York.

Wahls 1981
Wahls, H. E. (1981). Tolerable settlement of buildings. *Journal of Geotechnical Engineering, 107,* ASCE.

Wallis 1991
Wallis, S. 1991. Non-shielded TBM holds squeezing clay in check, *Tunnels and Tunnelling,* Jan.

Wang 1985
Wang, Jing-Ming (translated by C. Wu and J. J. Litehiser). 1985. "The Distribution of Earthquake Damage to Underground Facilities during the 1976 Tang-Shan Earthquake," *Earthquake Spectra,* Vol. 1, No. 4:741-757.

Warpinski and Teufel 1993
Warpinski, N. R., and L. W. Teufel. 1993. "Laboratory Measurements of the Effective-Stress Law for Carbonate Reeks under Deformation," *Int. J. Rock Mech. Min. Sci. & Geomech.,* Abstr., Vol. 30, No. 7:1169-1172.

West 1987
West, G. 1987. "Channel Tunnel Meeting: An Engineering Geological and Geotechnical Overview," *Tunnels and Tunnelling: 47-50.*

Westfall 1989
Westfall, D. E. 1989. "Friction Losses for Use in the Design of Hydraulic Conveyance Tunnels," Proceedings, Second International Conference on Hydraulic Structures, Fort Collins, Colorado.

Whittle 1987
Whittle, A. J. 1987. SC.D. dissertation, Department of Civil Engineering, Massachusetts Institute of Technology, Cambridge, MA 427.

Wickham, Tiedemann, and Skinner 1972
Wickham, G. E., Tiedemann, H. R., and Skinner, E. H. 1972. "Support Determinations Based on Geologic Predictions," Proceedings, First Rapid Excavation and Tunneling Conference, Chicago, VOII.

Wickham, Tiedemann, and Skinner 1974
Wickham, G. E., Tiedemann, H. R., and Skinner, E. H. 1974. "Ground Support Prediction Model - RSR Concept," *Proceedings, RETC,* AWE, New York 691-707.

Winderburg and Trilling 1934
Winderburg, D. F., and Trilling, C. 1934. "Collapse by Instability of Thin Cylindrical Shells under External Pressure," *Transactions, ASME.*

Wood 2000
Wood, A.M., 2000 "*Tunneling, Management by Design*"; E & FN Spon, London.

Xanthakos, Abramson and Bruce 1994
Xanthakos, P. P., L.W. Abramson, and D.A. Bruce (1994). *Ground Control and Improvement,* New York: John Wiley and Sons, Inc.

Xanthakos 1979
Xanthakos, P.P. 1979 *Slurry Walls.* McGraw-Hill, New York.

Xanthakos 1974
Xanthakos, S.E. 1974 *Underground Construction in Fluid Trenches.* University of Illinois, Chicago.

Zanon (ca. 1962)
Zanon,A. (ca. 1962) "Excavation of Super Highway Tunnels in Very Difficult Formations," translated by B.E. Hartmann. Terrametrics, Golden, Colo.

Zhu and Wang 1993
Zhu, W., and Wang, P. 1993. "Finite Element Analysis of Jointed Rock Masses and Engineering Application," *Int. J. Rock Mech. Min. Sci. & Geomech.,* Abstr., Vol. 30 No. 5: 537-544.

Zick and Ofiara 1989
Zick, P., and Ofiara D. 1989. "Selection of *PCC Liner* Segments and Compatible TBM for the San Antonio Tunnels," *RETC Proceedings*: 385-398.

APPENDIX A – FREQUENTLY-USED TUNNELING TERMS

ANFO - Ammonium nitrate mixed with fuel oil used as an explosive in rock excavation.

Active reinforcement - Reinforcing element that is prestressed or artificially tensioned in the rock mass when installed.

Alluvium - A general term for recent deposits resulting from streams.

Aquiclude -1. Rock formation that, although porous and capable of absorbing water slowly, does not transmit water fast enough to furnish an appreciable supply for a well or spring. *2.* An impermeable rock formation that may contain water but is incapable of transmitting significant water quantities. Usually functions as an upper or lower boundary of an aquifer.

Aquifer -1. A water-bearing layer of permeable rock or soil. 2. A formation, a group of formations, or a part of a formation that contains sufficient saturated permeable material to yield significant quantities of water to wells and springs.

Aquitard - A formation that retards but does not prevent water moving to or from an adjacent aquifer. It does not yield water readily to wells or springs, but may store groundwater.

Artesian condition - Groundwater confined under hydrostatic pressure. The water level in an artesian well stands above the top of the artesian water body it taps. If the water level in an artesian well stands above the land surface, the well is a flowing artesian well.

Average lithostatic gradient - An approximation of the increase in lithostatic stress with depth.

Back - The surface of the tunnel excavation above the spring line; also, roof (see, also, crown)

Backfill - Any material used to fill the empty space between a lining system and excavated rock or soil surface.

Bench - A berm or block of rock within the final outline of a tunnel that is left after a top heading has been excavated.

Bit - A star or chisel-pointed tip forged or screwed (detachable) to the end of a drill steel.

Blocking - Wood or metal blocks placed between the excavated surface of a tunnel and the bracing system, e.g., steel sets. Continuous blocking can also be provided by shotcrete.

Bootleg or Socket - That portion or remainder of a shot hole found in a face after a blast has been fired.

Brattice (brattishing) - A partition formed of planks or cloth in a shaft or gallery for controlling ventilation.

Breast boarding - Partial or complete braced supports across the tunnel face that hold soft ground during tunnel driving.

Bulkhead - **A** partition built in an underground structure or structural lining to prevent the passage of air, water, or mud.

Burn cut - Cut holes for tunnel blasting that are heavily charged, close together, and parallel. About four cut holes are used that produce a central, cylindrical hole of completely shattered rock. The central or bum cut provides a free face for breaking rock with succeeding blasts.

Cage - **A** box or enclosed platform used for raising or lowering men or materials in a shaft.

Calcareous - Containing calcium carbonate

Calcite - A mineral predominantly composed of calcium carbonate, with a Mohr's hardness of 3.

California switch - **A** portable combination of siding and switches superimposed on the main rail track in a tunnel.

Center core method - A sequence of excavating a tunnel in which the perimeter above the invert is excavated first to permit installation of the initial ground support. One or a series of side and crown drifts may be utilized. The center core is excavated after the initial ground support is installed.

Chemical grout - **A combination** of chemicals that gel into a semisolid after they are injected into the ground to solidify water-bearing soil and rocks.

Cherry picker - A gantry crane used in large tunnels to pick up muck cars and shift a filled car from a position next to the working face over other cars to the rear of the train.

Cohesion - A measure of the shear strength of a material along a surface with no perpendicular stress applied to that surface.

Conglomerate - A sedimentary rock mass made up of rounded to subangular coarse fragments in a matrix of finer grained material.

Controlled blasting - Use of patterned drilling and optimum amounts of explosives and detonating devices to control blasting damage.

Cover - Perpendicular distance to nearest ground surface from the tunnel.

Crown - The highest part of a tunnel.

Cut-and-cover - A sequence of construction in which a trench is excavated, the tunnel or conduit section is constructed, and then covered with backfill.

Cutterhead - The front end of a mechanical excavator, usually a wheel on a tunnel boring machine, that cuts through rock or soft ground.

Delays - Detonators that explode at a suitable fraction of a second after passage of the fling current from the exploder. Delays are used to ensure that each charge will fire into a cavity created by earlier shots in the round.

Disk cutter - A disc-shaped cutter mounted on a cutterhead.

Drag bit - A spade-shaped cutter mounted on a cutterhead.

Drift - An approximately horizontal passageway or portion of a tunnel. In the latter sense, depending on its location in the final tunnel cross section, it may be classified as a "crown drift," "side drift" "bottom drift", etc. A small tunnel driven ahead of the main tunnel.

Drifter - A rock drill mounted on column, bar, or tripod, used for drilling blast holes in a tunnel face, patented by J. G. Leyner, 1897.

Drill-and-blast - A method of mining in which small-diameter holes are drilled into the rock and then loaded with explosives. The blast from the explosives fragments and breaks the rock from the face so that the reek can be removed. The underground opening is advanced by repeated drilling and blasting.

Drill steel - See steel, drill.

Elastic - Describes a material or a state of material where strain or deformation is recoverable, nominally instantaneously but actually within certain tolerances and within some arbitrary time. Capable of sustaining stress without permanent deformation.

Elastic rock zone - The zone outside the relaxed rock zone where excavation has altered the in situ stress field. Rock in the elastic zone undergoes recoverable elastic deformation.

Erector arm - Swing arm on tunnel boring machine or shield, used for picking up supports and setting them in position.

Extrados - The exterior curved surface of an arch.

Face - The advance end or wall of a tunnel, drift, or other excavation at which work is progressing.

Final ground or rock support - Support placed to provide permanent stability, usually consisting of rock reinforcement, shotcrete, or concrete lining. May also be required to improve fluid flow, ensure water tightness, or improve appearance of tunnel surface.

Finite element method - The representation of a structure as a finite number of two-dimensional and/or three-dimensional components called finite elements.

Firm ground - Stiff sediments or soft sedimentary rock in which the tunnel heading can be advanced without any, or with only minimal, roof support, the permanent lining can be constructed before the ground begins to move or ravel.

Forepole - A pointed board or steel rod driven ahead of timber or steel sets for temporary excavation support.

Forepoling - Driving forepoles ahead of the excavation, usually supported on the last steel set or lattice girder erected, and in an array that furnishes temporary overhead protection while installing the next set.

Full-face Heading - Excavation of the whole tunnel face in one operation.

Gouge zone - A layer of fine, wet, clayey material occurring near, in, or at either side of a fault or fault zone.

Grade - Vertical alignment of the underground opening or slope of the vertical alignment.

Granite - A coarse-grained, plutonic (intrusive) igneous rock with a general composition of quartz (10-30 percent), feldspar (50-80 percent), mostly potassium feldspar, and matic minerals such as biotite (10-20 percent).

Granodiorite - A coarse-grained crystalline, intrusive rock with a general composition of quartz (10-20 percent), feldspar (50-60 percent), mostly sodium-rich feldspar, and matic minerals such as biotite (20-30 percent).

Ground control - Any technique used to stabilize a disturbed or unstable rock mass.

Ground stabilization - Combined application of ground reinforcement and ground support to prevent failure of the rock mass.

Ground support - Installation of any type of engineering structure around or inside the excavation, such as steel sets, wooden cribs, timbers, concrete blocks, or lining, which will increase its stability. This type of support is external to the rock/soil mass.

Grout - Neat cement slurry or a mix of equal volumes of cement and sand that is poured into joints in masonry or injected into rocks. Also used to designate the process of injecting joint-filling material into rocks. See grouting.

Grouting - 1. Injection of fluid grout through drilled holes, under pressure, to fill seams, fractures, or joints and thus seal off water inflows or consolidate fractured rock ("formation grouting"). 2. Injection of fluid grout into annular space or other voids between tunnel lining and rock mass to achieve contact between the lining and the surrounding rock mass ("skin" or "contact" grouting). 3. Injection of grout in tail/void behind prefabricated, segmental lining ("backfill grouting"). 4. The injection under relatively high pressures of a very stiff, "zero-slump" mortar or chemical grout to displace and compact soils in place ("compaction grouting").

Gunite - See shotcrete.

Heading - The wall of unexcavated rock at the advance end of a tunnel. Also used to designate any small tunnel and a small tunnel driven as a part of a larger tunnel.

Heading and bench - A method of tunneling in which a top heading is excavated first, followed by excavation of the horizontal bench.

Ho-ram - A hydraulically operated hammer, typically attached to an articulating boom, used to break hard rock or concrete.

Hydraulic jacking - Phenomenon that develops when hydraulic pressure within a jacking surface, such as a joint or bedding plane, exceeds the total normal stress acting across the jacking surface. This results in an increase of the aperture of the jacking surface and consequent increased leakage rates, and spreading of the hydraulic pressures. Sometimes referred to as hydraulic fracturing.

Indurated - State of compact rock or soil, hardened by the action of pressure, cementation, and heat.

Initial ground or rock support - Support required to provide stability of the tunnel opening, installed directly behind the face as the tunnel or shaft excavation progresses, and usually consisting of steel rib or lattice girder sets, shotcrete, rock reinforcement, or a combination of these.

Intrados - The interior curved surface of an arch.

Invert - On a circular tunnel, the invert is approximately the bottom 90 deg of the arc of the tunnel; on a square-bottom tunnel, it is the bottom of the tunnel.

Invert strut - The member of a set that is located in the invert.

Joint - A fracture in a rock along which no discernible movement has occurred.

Jumbo - A movable machine containing working platforms and drills, used for drilling and loading blast holes, scaling the face, or performing other work related to excavation.

Jump set - Steel set or timber support installed between overstressed sets.

Lagging - Wood planking, steel channels, or other structural materials spanning the area between sets.

Lifters - Shot holes drilled near the floor of a tunnel and fired after the bum or wedge cut holes and relief holes.

Line - Horizontal or planar alignment of the underground opening.

Liner Plates - Pressed steel plates installed between the webs of the ribs to make a tight lagging, or bolted together outside the ribs to make a continuous skin.

Lithology - The character of a rock described in terms of its structure, color, mineral composition, grain size, and arrangement of its component parts.

Lithostatic Pressure - The vertical pressure at a point in the earth's crust that is equal to the pressure that would be exerted by a column of the overlying rock or soil.

Mine straps - **Steel** bands on the order of 12 in. wide and several feet long designed to span between rock bolts and provide additional rock mass support.

Mining - The process of digging below the surface of the ground to extract ore or to produce a passageway such as a tunnel.

Mixed face - The situation when the tunnel passes through two (or more) materials of markedly different characteristics and both are exposed simultaneously at the face (e.g., rock and soil, or clay and sand).

Mohr's hardness scale - A scale of mineral hardness, ranging from 1 (softest) to 10 (hardest).

Muck - Broken rock or earth excavated from a tunnel or shaft.

Open cut - Any excavation made from the ground surface downward.

Overbreak - The quantity of rock that is actually excavated beyond the perimeter established as the desired tunnel outline.

Overburden - The mantle of earth overlying a designated unit; in this report, refers to soil load overlying the tunnel.

Passive reinforcement - Reinforcing element that is not prestressed or tensioned artificially in the rock, when installed. It is sometimes called rock dowel.

Pattern Reinforcement or Pattern Bolting - The installation of reinforcement elements in a regular pattern over the excavation surface.

Penstock - A pressure pipe that conducts water to a power plant.

Phreatic surface - That surface of a body of unconfined ground water at which the pressure is equal to that of the atmosphere.

Pillar - A column or area of coal or ore left to support the overlaying strata or hanging wall in mines.

Pilot drift or tunnel - A drift or tunnel driven to a small part of the dimensions of a large drift or tunnel. It is used to investigate the rock conditions in advance of the main tunnel excavation, or to permit installation of ground support before the principal mass of rock is removed.

Piping - The transport of silt or sand by a stream or water through (as an embankment), around (as a tunnel), or under (as a dam) a structure.

Plastic - Said of a body in which strain produces continuous, permanent deformation without rupture.

Pneumatically applied mortar or concrete - See shotcrete.

Portal - The entrance from the ground surface to a tunnel.

Powder - Any dry explosive.

Pre-reinforcement - Installation of reinforcement in a rock mass before excavation commences.

Prestressed rock anchor or tendon - Tensioned reinforcing elements, generally of higher capacity than a rock bolt, consisting of a high-strength steel tendon (made up of one or more wires, strands, or bars) fitted with a stressing anchorage at one end and a means permitting force transfer to the grout and rock at the other end.

Principal stress - A stress that is perpendicular to one of three mutually perpendicular planes that intersect at a point on which the shear stress is zero; a stress that is normal to a principal plane of stress. The three principal stresses are identified as least or minimum, intermediate, and greatest or maximum.

Pull - The advance during the firing of each complete round of shot holes in a tunnel.

P-waves - Compression waves.

Pyramid cut - A method of blasting in tunneling or shaft sinking in which the holes of the central ring (cut holes) outline a pyramid, their toes being closer together than their collars.

Quartz - A mineral composed of silicon and oxygen, with Mohr's hardness of 7.

Raise - A shaft excavated upwards (vertical or sloping). It is usually cheaper to raise a shaft than to sink it since the cost of mucking is negligible when the slope of the raise exceeds 40" from the horizontal.

Ravening Ground - Poorly consolidated or cemented materials that can stand up for several minutes to several hours at a fresh cut, but then start to slough, slake, or scale off.

Recessed rock anchor - A rock anchor placed to reinforce the rock behind the final excavation line after a portion of the tunnel cross section is excavated but prior to excavating to the final line.

Relievers or relief holes - The holes fired after the cut holes and before the lifter holes or rib (crown, perimeter) holes.

Rib -1. An arched individual frame, usually of steel, used in tunnels to support the excavation. Also used to designate the side of a tunnel. 2. An H- or I-beam steel support for a tunnel excavation (see Set).

Rib holes - Holes drilled at the side of the tunnel of shaft and fired last or next to last, i.e., before or after lifter holes.

Road header - A mechanical excavator consisting of a rotating cutterhead mounted on a boom; boom may be mounted on wheels or tracks or in a tunnel boring machine.

Rock bolt - A tensioned reinforcement element consisting of a rod, a mechanical or grouted anchorage, and a plate and nut for tensioning by torquing the nut or for retaining tension applied by direct pull.

Rock dowel - An untensioned reinforcement element consisting of a rod embedded in a grout-filled hole.

Rock mass - In situ rock, composed of various pieces the dimensions of which are limited by discontinuities.

Rock reinforcement - The placement of rock bolts, rock anchors, or tendons at a fairly uniform spacing to consolidate the rock and reinforce the rock's natural tendency to support itself. Also used in conjunction with shotcrete on the rock surface.

Rock reinforcement element - A general term for rock bolts, tendons, and rock anchors.

Rock support - The placement of supports such as wood sets, steel sets, or reinforced concrete linings to provide resistance to inward movement of rock toward the excavation.

Round - A group of holes fired at nearly the same time. The term is also used to denote a cycle of excavation consisting of drilling blast holes, loading, firing, and then mucking.

Scaling - The removal of loose rock adhering to the solid face after a shot has been fired. A long scaling bar is used for this purpose.

Segments - Sections that make up a ring of support or lining; commonly steel or precast concrete.

Set - The temporary support, usually of Steel or timber, inserted at intervals in a tunnel to support The ground as a heading is excavated (see Rib).

Shaft - An elongated linear excavation, usually vertical, But may be excavated at angles greater than 30 deg from the horizontal.

Shear - A deformation that forms from stresses that displace one part of the rock past the adjacent part along a fracture surface.

Shield - A steel tube shaped to fit the excavation line of a tunnel (usually cylindrical) and used to provide support for the tunnel; provides space within its tail for erecting supports; protects the men excavating and erecting supports; and if breast boards are required, provides supports for them. The outer surface of the shield is called the shield skin.

Shield tail (or skirt) - An extension to the rear of the shield skin that supports soft ground and enables the tunnel primary lining to be erected within its protection.

Shotcrete - Concrete pneumatically projected at high Velocity onto a surface; pneumatic method of applying a lining of concrete; this lining provides tunnel support and can serve as the permanent lining.

Shove - The act of advancing a TBM or shield with hydraulic jacks.

Skip - A metal box for carrying reek, moved vertically or along an incline.

Spall - A chip or splinter of rock. Also, to break rock into smaller pieces.

Spiles - Pointed boards or steel rods driven ahead of the excavation, (similar to forepoles).

Spoil - See muck.

Spot reinforcement or spot bolting - The installation of reinforcement elements in localized areas of rock instability or weakness as determined during excavation. Spot reinforcement may be in addition to pattern reinforcement or internal support systems.

Spring line - The point where the curved portion of the roof meets the top of the wall. In a circular tunnel, the spring lines are at opposite ends of the horizontal center line.

Squeezing ground - Material that exerts heavy pressure on the circumference of the tunnel after excavation has passed through that area.

Stand-up-time - The time that elapses between the exposure of reek or soil in a tunnel excavation and the beginning of noticeable movements of the ground.

Starter tunnel - A relatively short tunnel excavated at a portal in which a tunnel boring machine is assembled and mobilized.

Steel, drill - A chisel or star-pointed steel rod used in making a hole in reek for blasting. A steel rod used to transmit thrust or torque from a power source, compressed air or hydraulic, to the drill bit.

Stemming - Material used for filling a blasting hole to confine the charge or explosive. Damp san~ damp sand mixed with clay, or gypsum plaster are examples of materials used for this purpose.

Struts - Compression supports placed between tunnel sets.

TBM - Tunnel boring machine.

Tail void - The annular space between the outside diameter of the shield and the outside of the segmental lining.

Tie rods - Tension members between sets to maintain spacing. These pull the sets against the struts.

Tight - Rock remaining within the minimum excavation lines after completion of a round—that is, material that would make a template fit tight. "Shooting tights" requires closely placed and lightly loaded holes.

Timber sets - The complete frames of temporary timbering inserted at intervals to support the ground as heading is excavated.

Top heading -1. The upper section of the tunnel. 2. A tunnel excavation method where the complete top half of the tunnel is excavated before the bottom section is started.

Tunnel - An elongated, narrow, essentially linear excavated underground opening with a length greatly exceeding its width or height. Usually horizontal but may be driven at angles up to 30 degrees.

Tunnel Boring Machine (TBM) - A machine that excavates a tunnel by drilling out the heading to full size in one operation; sometimes called a mole. The tunnel boring machine is typically propelled forward by jacking off the excavation supports emplaced behind it or by gripping the side of the excavation.

Voussoir - A section of an arch. One of the wedge-shaped pieces of which an arch is composed or assumed to be composed for purposes of analysis.

Walker - One who supervises the work of several gangs.

Water table - The upper limit of the ground saturated with water.

Weathering - Destructive processes, such as the discoloration, softening, crumbling, or pitting of rock surfaces brought about by exposure to the atmosphere and its agents.

APPENDIX B.1 – ELASTIC CLOSED FORM MODELS FOR GROUND-LINING INTERACTION

The source document for Appendices B.1 and B.2 is: *Guidelines for Tunnel Lining Design* by the Technical Committee on Tunnel Lining Design of the Underground Technology Research Council, edited by T.D. O'Rourke (1984), and reproduced here, for convenience.

Several closed form models for ground-lining interaction have been developed on the basis of elastic ground and lining properties. Although the models are limited by assumptions of elasticity and specific conditions of loading, they nonetheless possess several attractive features, including their relative simplicity, sensitivity to significant ground and support characteristics, and ability to represent the mechanics of ground-lining interaction. The models are useful for evaluating the variation in lining response to changes in soil, rock, and structural material properties, in-situ stresses, and lining dimensions. However, considerable judgment must be exercised by the tunnel designer in applying these models. Their chief value lies in their ability to place bounding conditions on performance and thereby supplement the many practical considerations of tunnel operation, construction influence, and variation in ground conditions discussed in the main body of this work.

Some special characteristics of elastic closed form models are discussed by Schmidt (1984).

A.I Background

Most elastic closed form models are based on the assumption that the ground is an infinite, elastic, homogeneous, isotropic medium. The interaction between the ground and a circular elastic, thin walled lining is assumed to occur under plane strain conditions. The models involve either full slip or no slip conditions along the ground-lining interface.

In some models (Muir Wood, 1975; Curtis, 1976), equations have been developed for interface conditions that involve a shear strength between that of full and no slip conditions. The magnitude of the vertical stress is assumed equal to the product of the soil unit weight, y, and the depth to the longitudinal centerline of the tunnel, H. The increased stress from crown to invert is not considered so that the solutions are appropriate for deep tunnels. Finite element analyses by Ranken, Ghaboussi, and Hendron (1978) and a review of analytical work by Einstein and Schwartz (1979) indicate that tunnels are sufficiently deep for application of the elastic solutions when HID is greater than about 1.5, where D is the outside diameter of the tunnel.

The elastic models can be divided into two categories according to the conditions of in-situ stress that prevail when the lining is installed and loaded. Work by Morgan (1961), Muir Wood (1975), Curtis' (1976), Ranken, Ghaboussi, and Hendron (1978), and Einstein and Schwartz (1979) has been based on lining response within a stressed ground mass.

This condition is commonly referred to as excavation loading. Work by Burns and Richard (1964), Hoeg (1968), Peck, Hendron, and Mohraz (1972), Dar and Bates (1974), and Mohraz, et al. (1975) has been based on lining response in a ground mass subjected to an externally applied pressure.

This condition is commonly referred to as overpressure loading.

Overpressure loading implies that the lining is installed before external loads are applied. This assumption is suitable for simulating the effects of external blasting and the placement of fill above a previously constructed tunnel. Models developed on the basis of overpressure loading do not simulate the most frequently encountered situation in which the lining is constructed in soil or rock subjected to in-situ stresses. In general, models based on overpressure loading result in higher values of thrust and moment compared to those based on excavation loading.

A.2 Analytical Results

The analytical results derived from the work of Ranken, Ghaboussi, and Hendron (1978) for excavation loading are used in this appendix to show how moments and thrusts vary as a function of the relative stiffness between the ground and lining. The conditions of in-situ stress assumed in the model are illustrated in Figure A.l, where the vertical stress is defined as previously mentioned and the horizontal stress is defined as the product of the coefficient of earth pressure at rest, K_o, and the vertical stress. It is not possible to install a lining without some relief of in-situ stresses. The amount of stress relief will depend on the characteristics of the excavation and support process and is particularly sensitive to the distance support is installed behind the excavated face. The model therefore represents a limiting condition of restraint against inward ground movement.

It is convenient to summarize the analytical results in dimensionless form. Accordingly, the dimensionless moment, or moment coefficient is given by $M/(\gamma HR^2)$ where M is the moment per unit length of tunnel, γ is the ground unit weight, H is the depth to the tunnel center line, and R is the external lining radius. Similarly, the thrust coefficient is given by $T/(\gamma HR)$, where T is the thrust per unit length of tunnel. The dimensionless parameters that reflect the relative stiffness between the

ground and lining are referred to as the flexibility ratio, F, and the compressibility ratio, C.

The flexibility ratio is a measure of the flexural stiffness of the ground to that of the lining. Assuming a rectangular cross-section of the lining, the flexibility ratio is defined as

$$F = (E_m / E_l)\ (R/t)^3\ [(2(1 - v_l^2))/(1 + v_m)] \qquad \text{(A.1)}$$

in which E_m is the modulus of the surrounding medium, or ground, E_l is the modulus of the lining, t is the lining thickness, and v_l and v_m are the Poisson ratios of the lining and ground, respectively.

The compressibility ratio is a measure of the extensional stiffness of the ground to that of the lining. Assuming a rectangular cross-section of the tunnel lining, the compressibility ratio is defined as

$$C = (E_m / E_l)\ (R/t)\ [(1 - v_l^2)/((1 + v_m)\ (1 - 2\ v_m))] \qquad \text{(Equation A.2)}$$

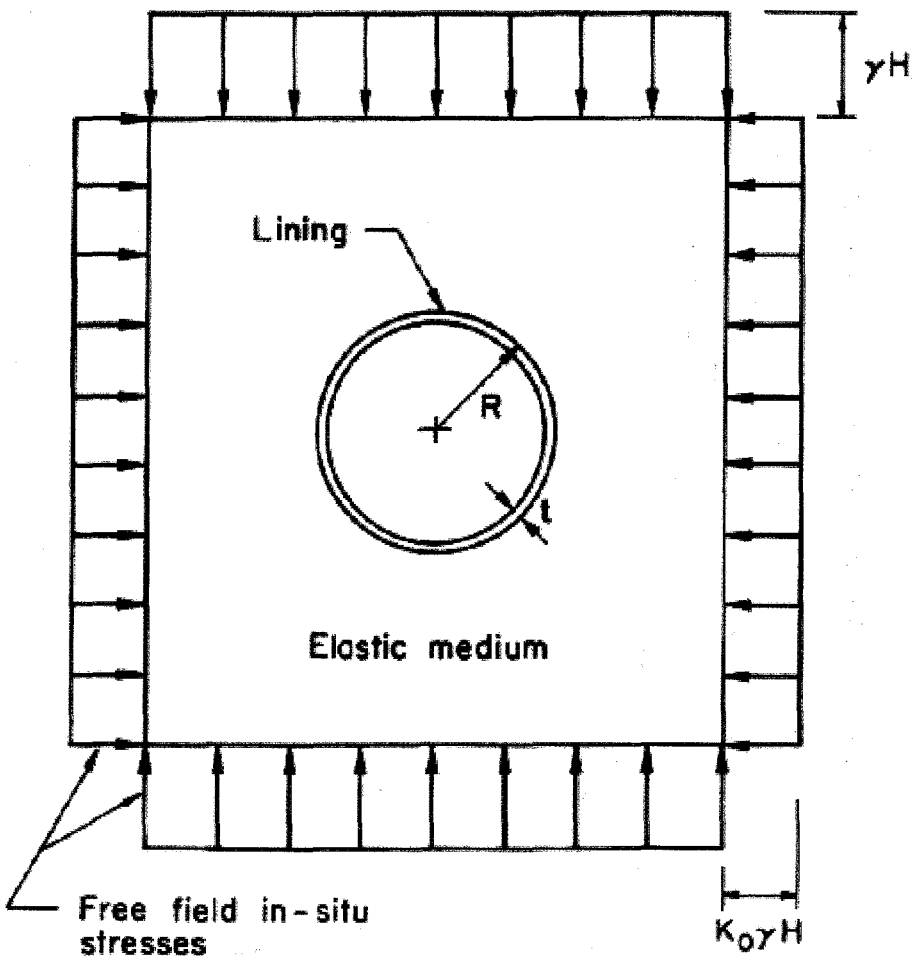

Figure A.1 Stresses and Lining Geometry for Elastic Closed Form Models of Ground-Lining Interaction

It should be pointed out that slightly different expressions for the flexibility and compressibility ratios have been used by others (e.g. Muir Wood, 1975; Einstein and Schwartz, 1979). As v_m approaches 0.5 in Eq. A.2, as would be the case for a fully saturated clay, the value of C approaches infinity. Einstein and Schwartz (1979) point out that this trend can be conceptually misleading, and have derived an alternative expression on the basis of slightly different assumptions.

Figure A.2 shows the maximum moment coefficient plotted as a function of F pertaining to $K_o = 0.5$ and 2.0 for full and no slip conditions. The plots represent absolute values of the moment, which achieves a maximum at the crown, springline, and invert of the tunnel. The moment coefficient diminishes rapidly as F increases to about 20. Thereafter, there is little variation in moment as the relative stiffness between ground and lining increases. The plots pertain to C = 0.4 and v_m= 0.4.

Because neither of these parameters has a significant influence on moment, the figure may be used as a good approximation of the relationship for other values of C and υ_m generally encountered in practice.

The thrust coefficient does not vary significantly as a function of F for values of F greater than about 3.

However, the thrust decreases substantially with increased C as shown in Figure A.3. This figure was developed for $K_o = 0.5$ and 2.0, F = 10, and $\upsilon_m = 0.4$ under full and no-slip conditions. The highest thrust occurs generally in the crown and invert, with thrusts being more pronounced for no slip as opposed to full-slip conditions. The thrust can be affected significantly by υ_m. Although not shown, the curves in Figure A.2 would be displaced upward for $\upsilon_m >$

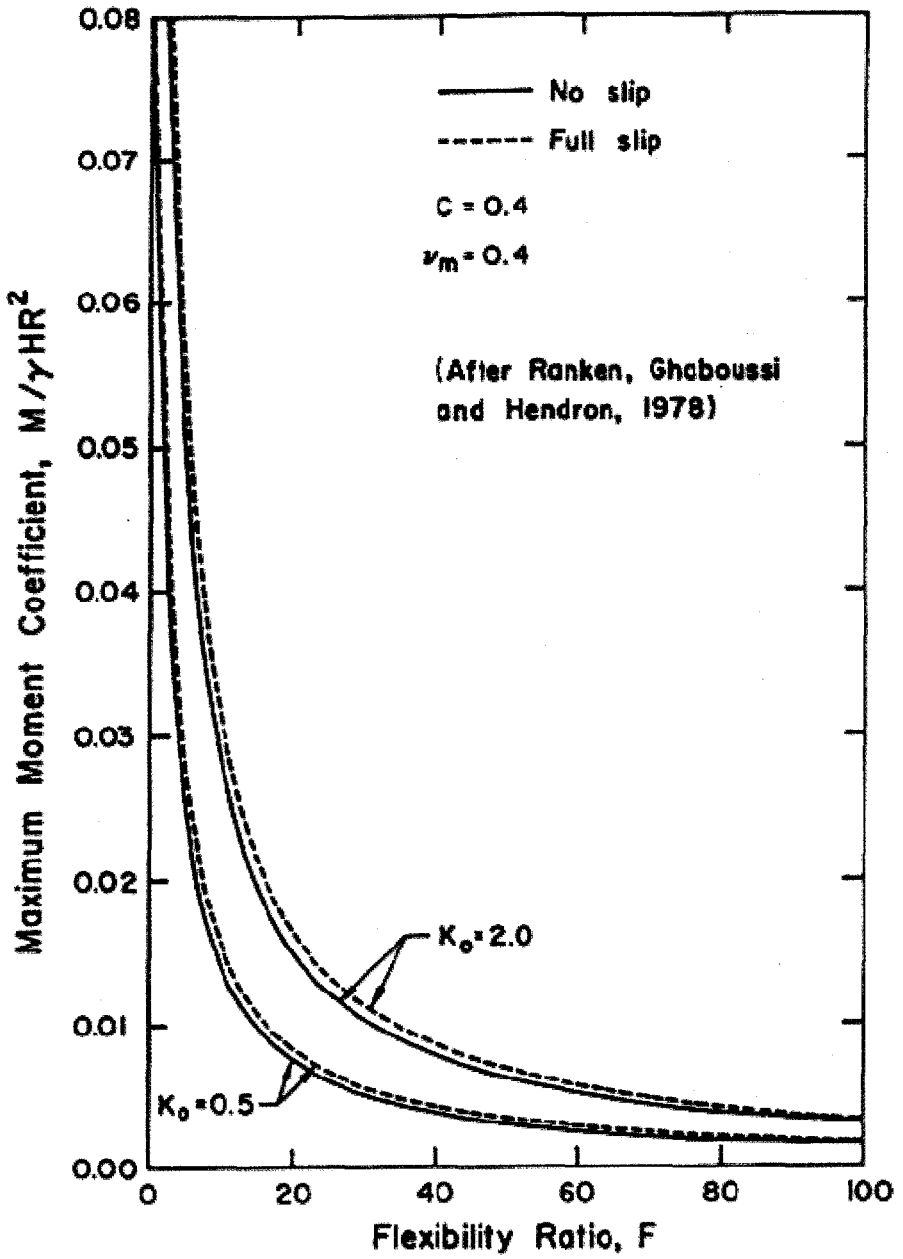

Figure A.2 – Maximum Moment Coefficient as a Function of the Flexibility Ratio

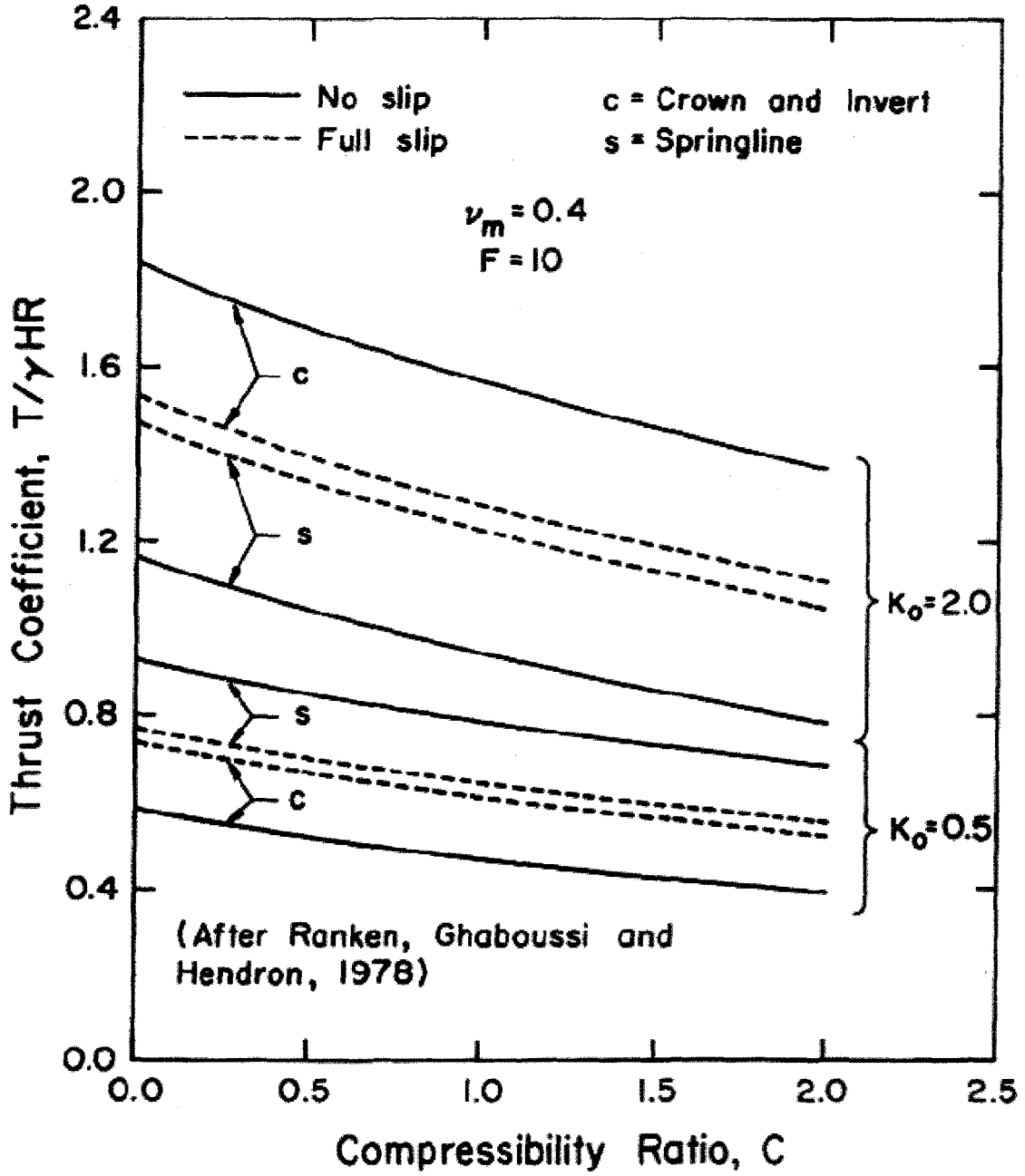

Figure A.3 – Thrust Coefficient as a Function of the Compressibility Ratio

Figures A.2 and A.3 are instructive as indicators of the qualitative behavior of flexible tunnel linings. It should, however, be recognized that quantitative values for analysis of specific cases depend considerably on the value assigned to the at-rest earth pressure coefficient, K_o, which must generally be estimated on the basis of relatively crude characterizations of actual site conditions. In sandy soils of geologically recent origin with relatively high internal friction, K_o may approximate 0.5. In overconsolidated clays, K_o will often exceed 1.0. In rocks that have been subject to complex geological processes, K_o may be extremely variable. Additional complications arise because the excavation process tends to relieve in-situ stresses adjacent to the tunnel lining. As a consequence, the lining may be subjected to a stress state significantly less than that based on the assumption of at-rest horizontal stresses and full overburden pressure.

A.3 Applications

The equations, on which Figures A.2 and A.3 are based, were developed for linear elastic linings. Concrete linings, however, are characterized by significant nonlinear stress-strain behavior. Structural failure of a concrete lining results from crushing on the compressive face, and the load bearing capacity of the lining may significantly exceed the structural bending capacity of the section.

Linear elastic models may be biased to a relatively low assessment of the lining capacity because they tend to emphasize the bending capacity of the section.

The lining designer should recognize this bias. In Appendix B.2, the nonlinear response of a concrete lining is considered and compared with the response modeled by the linear elastic solutions.

There are many factors in addition to the effects of nonlinearity that the designer must consider. Concrete creep and the use of segmental linings may lead to an increase in the relative stiffness between the ground and lining. The relief of in-situ stresses during excavation may cause substantial reductions in pressure relative to those inferred by excavation loading. The actual ground loads may not be distributed continously along the lining, but may be concentrated at specific locations as would be the case for gravity loads in jointed rock and soil where significant loosening is permitted. Moreover, loads from shove jacks and contact grouting as well as those associated with future construction may be more critical than the loads from ground-lining interaction.

Careful evaluation of the many factors affecting lining response requires judgment. Linear elastic models supplement judgment. As discussed previously, the models are appropriately used when they bracket the limiting conditions of performance and point out trends in lining response as a result of variations of important parameters.

APPENDIX B.2 – LINEAR RESPONSE OF CONCRETE LININGS

As discussed in Appendix B.1, concrete linings are characterized by nonlinear stress-strain behavior so that linear elastic models may lead to results that are not consistent with actual performance. It is useful, therefore, to understand how linings are influenced by nonlinear characteristics. The moment-thrust diagram provides a means of comparing linear and nonlinear responses under similar conditions of loading and relative stiffness between the ground and concrete lining. This appendix provides a brief discussion of moment-thrust diagrams and summarizes analytical results showing the differences between lining performance modeled with linear and nonlinear concrete properties.

B.1 Moment-Thrust Interaction Diagrams

When the thrust and moment around the lining have been calculated, it is necessary to evaluate these quantities in comparison with allowable values. Normally, it is only necessary to make this comparison at locations where one of the quantities is maximum or where there is an abrupt change in the lining section. Moment and thrust interact strongly, so it is customary to check these quantities together by using the moment thrust (M-T) interaction diagram to represent the allowable combination. The M-T interaction diagram can be drawn for each section of the lining and depends only on the section dimensions and material properties.

One way to obtain a M-T interaction diagram is to use the procedure of the ACI Code (ACI Committee 318, 1983) in which the combinations of moment and thrust, which cause failure of the section under unconfined conditions, are computed and shown on a diagram in which thrust and moment are the axes. A typical M-T diagram for one section of a tunnel lining is shown in Figure B.1. This diagram may represent all the lining sections if they have constant dimensions and composition, or several such diagrams may be used to represent different lining sections.

To determine whether the section for which the M-T diagram in Figure B.1 is adequate, the moment and thrust combination obtained in the analysis should be plotted on the diagram as shown. The ACI Code procedure for constructing the diagram provides for capacity reduction factors as a safety measure to cover uncertainties in material properties, determination of section resistance, and the difference between concrete strength from cylinder tests and the structure. If the moment and thrust combination lies inside the diagram, the section is adequate. If it lies outside the diagram, the section is not adequate. The loads on the lining may be multiplied by a load factor to give the moment and thrust combination an additional margin of safety.

B.2 Linear and Nonlinear Response

Figure B.1 shows the difference that would be obtained between linear and nonlinear analyses for a lining section composed of reinforced concrete. In the figure, the moment-thrust paths are plotted for two different conditions of relative stiffness between the ground and lining. The nonlinear and linear paths, which intersect the interaction diagram below the balance point, pertain to a flexibility ratio less than that for the paths that intersect above the balance point. Each path is the locus of moment and thrust combinations corresponding to a given type of loading. As discussed in Chapter 3 and Appendix A, the loading and attendant ground-lining interaction may be modeled by means of excavation, overpressure, or gravity loading.

When linear analyses are performed, the material stress-strain response must follow a linear relationship even though the actual stresses carried by the lining may be well above the analytical values. Linear analyses are usually used to design above ground structures, with the under standing that linear assumptions are conservative. The error resulting from using linear analysis for a tunnel lining will be more pronounced than for an above ground structure because the confinement and greater indeterminacy of the underground structure provide more opportunity for moment redistribution.

As the nonlinear moment-thrust path in Figure B.1 intersects the interaction diagram below the balance point, the concrete cracks and the eccentricity decreases resulting in a higher value of thrust (point 2) than would be obtained in the linear analysis (point 1). The section has additional capacity even after the moment-thrust path has reached the envelope, and the thrust continues to increase even though the moment capacity drops off (point 3). Above the balance point, the thrust capacity calculated by nonlinear analysis will be closer to that calculated by linear analysis, as evidenced by comparing the percentage difference between points 4 and 5 with that of points 1 and 3.

A key aspect of the lining response, which is shown by nonlinear analysis, is that the concrete tunnel lining does not fail by excessive moment. It fails by thrust which is affected indirectly by moment.

Figure B.2 helps illustrate the general conditions summarized in Figure B.1 by means of a specific example. The figure shows the moment thrust interaction diagram for a 9-in. (230 mm)-thick concrete lining section. A one-foot length (305 mm)of a continuous lining with no reinforcing steel is considered. Also shown on the graph are moment thrust paths for the crown

obtained from analyses of an 18-ft (5.5 m)-diameter circular lining with the same cross-section as that used to draw the interaction diagram. A uniform gravity load was applied across the tunnel diameter as shown in the figure. Nonlinear geometric and material properties of the lining were modeled, as described by Paul, et al. (1983). The analyses were performed using a beam-spring simulation in which the ratio of the tangential to radial spring stiffness was one fourth. Analyses were performed with spring stiffness corresponding to moduli of the surrounding medium of 111,000 and 1,850,000 psi (770 and 12,800 MN/m2), representing soft and medium hard rock. The increased capacity associated with increased stiffness of the media illustrated by the nearly two-fold difference in maximum thrust for the two cases. When the moment and thrust are below the balance point, the thrust capacity from nonlinear analysis exceeds that from linear analysis by four times. When the moment-thrust paths intersect the M-T diagram above the balance point, the difference in maximum thrust between the linear and nonlinear analyses is only about 10 percent.

It should be emphasized that nonlinear analysis is subject to virtually all constraints that apply for linear models. As discussed in Appendix A, there are many additional factors the designer must consider, covering variations in material properties, ground loading, and construction methods. Nevertheless, nonlinear analysis provides insight regarding the manner in which the concrete lining deforms and shares load with the surrounding ground. The results of nonlinear modeling may be especially useful for moment and thrust combinations below the balance point of the interaction diagram, where linear evaluations tend to underestimate the load carrying capacity by a significant margin.

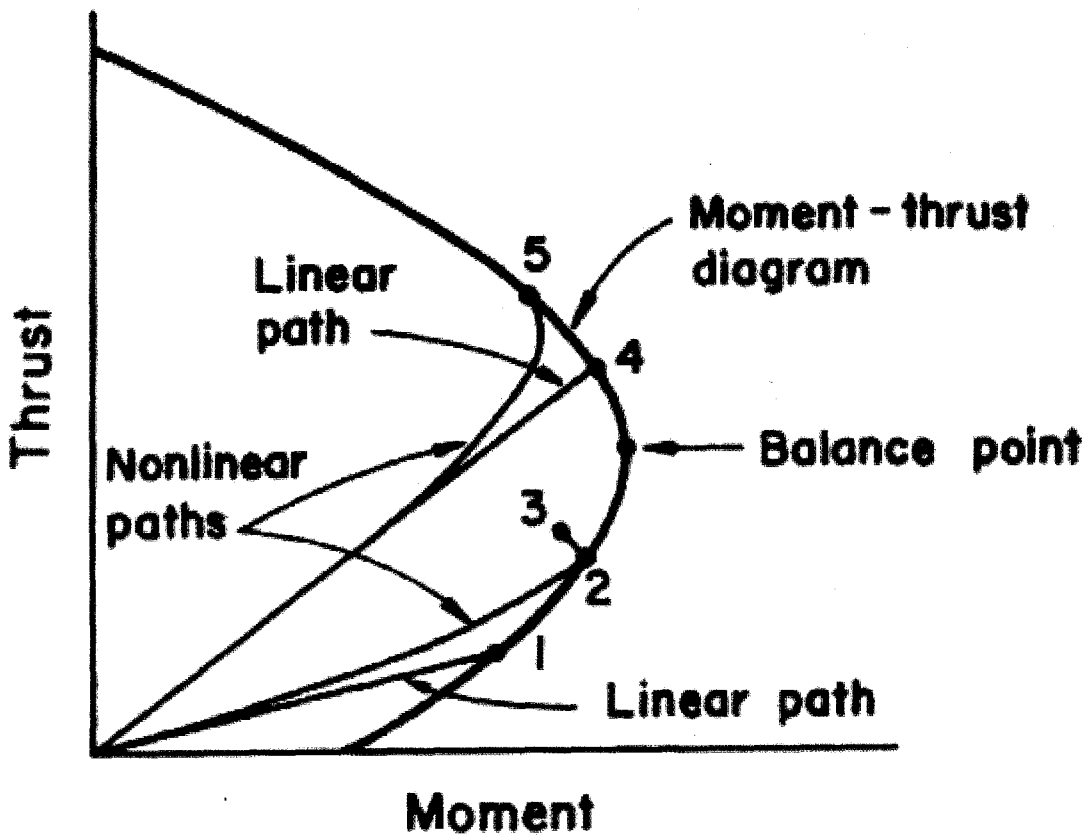

Figure B.1 -- General Moment-Thrust Diagram for a Reinforced Concrete Lining with Linear and Nonlinear Moment-Thrust Paths.

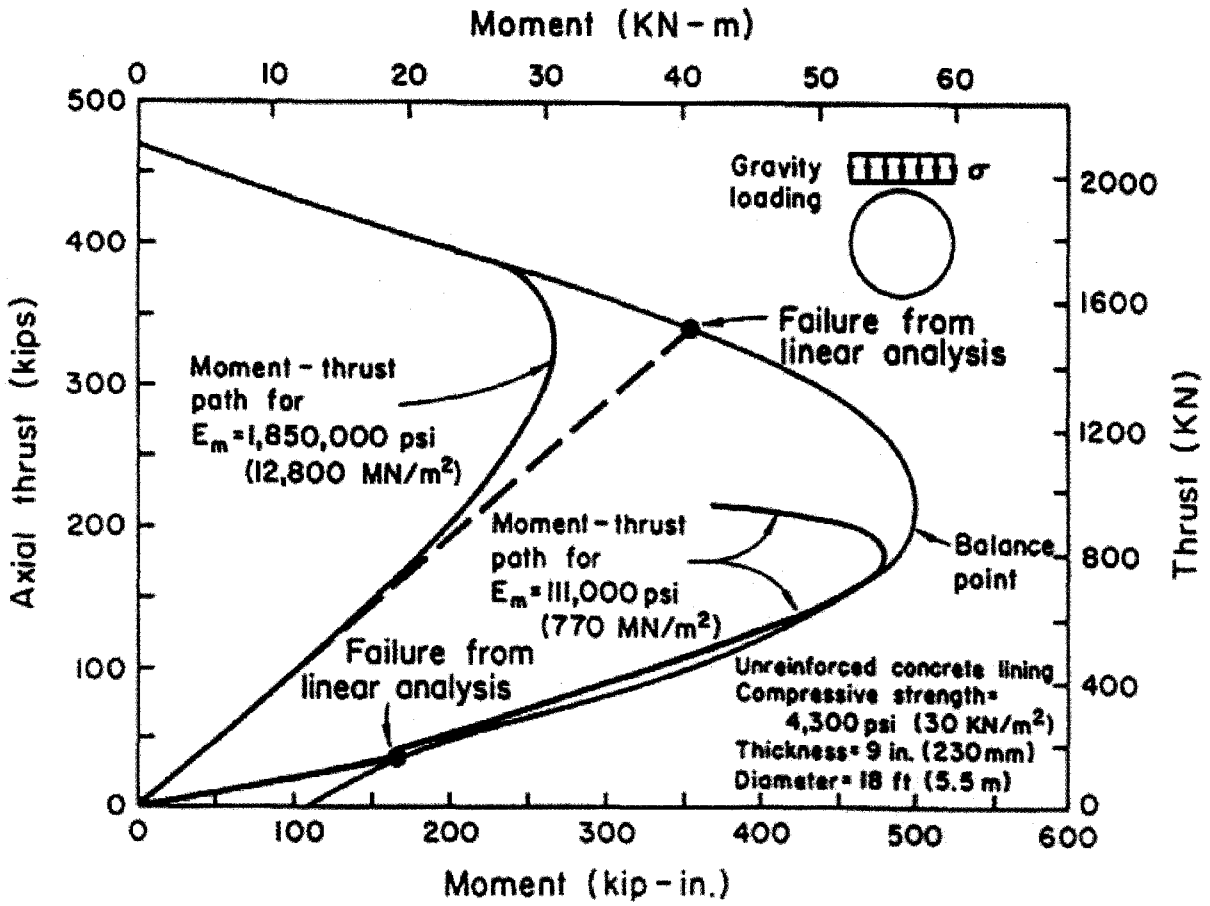

Figure B.2 - Moment-Thrust Paths for an Unreinforced Concrete Lining in Rock.

APPENDIX C1 – TUNNEL BORING MACHINES; PERFORMANCE CONCEPTS AND PREDICTION

This appendix provides the following information on TBM tunnels in rock for tunnel designers:

- TBM performance specifications;
- Test data for performance estimates, and;
- Cost estimating methods for TBM tunnels in rock.

The source document is the US Army Corps of Engineer Manual 1110-2-2901: *Engineering & Design, Tunnels and Shafts in Rock* (1997); it is reproduced here, for convenience.

C-1. TBM Design and Performance Concepts

The focus of a site investigation and testing program is not just to support the tunnel design. Testing results and recommendations made must also sensitize the contractor to the site conditions before construction, a perspective that permits estimation of cost and schedule and supports the selection of appropriate excavation equipment. The tests used to characterize muck for excavation purposes are often different from tests utilized in other civil works and may depend on the excavation method. For comparison of several alignments, a simple inexpensive test may be sensitive enough to detect differences in "*boreability*", identify problem areas, and give an estimate of thrust and torque requirements.

a. Principles of disc cutting. TBM design and performance predictions require an appreciation of basic principles of disc cutting. Figure C-1 illustrates the action of disc cutting tools involving inelastic crushing of rock material beneath the cutter disc and chip breakout by fracture propagation to an adjacent groove. The muck created in this process includes fine materials from crushing and chips from fracture. The fines are active participants in disc wear. Rock chips have typical dimensions of 15- to 25-mm thickness, widths on the order of the cutter disc groove spacing, and lengths on the order of two to four times the chip width. For efficient disc cutting by a TBM, important items include:

- The cutter indenting, normal force, and penetration must be sufficient to produce adequate penetration for kerf interaction and chip formation.
- Adjacent grooves must be close enough for lateral cracks to interact and extend to create a chip.
- The disc force component must be adequate to maintain cutter movement, despite rolling resistance / drag associated with penetration.

b. *Normal forces.* Disc penetration is affected by the applied TBM thrust. The average thrust, or normal force (F_n), per cutter is calculated as:

$$F_n = N_c p_c' \pi d_c^2/(4n) \qquad \text{(C-1)}$$

where N_c is the number of thrust cylinders; p_c' is the net applied hydraulic pressure; d_c is the diameter of each cylinder piston; and n is the number of cutters in the array.

Thrust delivered to the cutters is less than that calculated based on operating hydraulic pressure. If the backup system for a TBM is towed behind the TBM during mining, then this loss of thrust should be subtracted, as should friction losses from contact between the machine and the rock. For full shields, this loss can be very high and may ultimately stop forward progress, if ground pressures on the shield are larger than can be overcome by available thrust. The net average cutter normal force can easily be 40 percent less than the calculated gross force. For very hard rock, thrust limits may severely restrict penetration rate.

c. *Disc rolling force.* Disc rolling is affected by supplied machine power and cutterhead rotation. The average rolling force per cutter, F_r is calculated as:

$$F_r = P'/(2 \pi n r R_c) \qquad \text{(C-2)}$$

where P' is the net delivered power; r is the cutterhead rotation rate (rpm); and R_c is the weighted average cutter distance from the center of rotation. Losses on installed power can also be significant, and overall torque system efficiency is generally about 75 percent. Available F_r can be further reduced when motor problems temporarily decrease available torque; sticky muck clogs the cutterhead and muck buckets resulting in torque losses from friction and drag against rotation; or with a "frozen" or blocked cutter with a seized bearing. In fact, for many TBMs operated in weak to moderately strong rock, torque capacity limits penetration rate. This influence is decreased in recent TBMs designed with variable cutterhead rotation rates and higher powered motors. Load capacity of a sidewall gripper system can also limit the level of thrust and torque that can be applied. With weak rock, the grippers may slide or develop local bearing capacity failure in the sidewall rock. In weak rock, wood cribbing may be required if overbreak is more extensive than the gripper cylinder stroke. These problems are particularly severe when mining from weak into hard rock when high thrust is desired for efficient cutting, and the grippers must bear on low-strength rock. For shielded TBMs, the strength of the lining may limit operating thrust and torque.

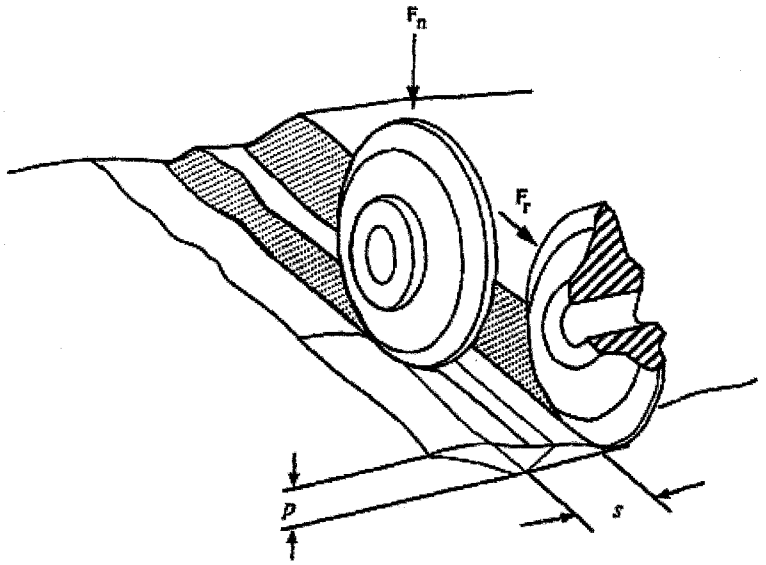

Figure C-1 – Disc Force and Geometry for Kerf Cutting

d. Disc force penetration index. TBM operating conditions are not uniform, and it is unlikely that the disc forces calculated above are actually developed for any particular cutter. However, it is convenient to develop a model for disc force prediction in the context of these average forces, as well as average disc spacing (s) and Penetration per revolution (P_{Rev}). The interaction of F_n and Fr and the resulting penetration is indicated in Figure C-2. The changing slope corresponds to a transition in dominance between crushing and chip formation and has been called the 'critical thrust'; unless a force of this magnitude can be applied, chipping between grooves will not occur. The critical thrust is directly related to rock strength or hardness, and increases with cutter spacing and disc edge width. Although these force/penetration relationships are known to be non-linear, several parameters have been defined based on ratios derived from force/penetration plots. The ratio of F_r to F_n has been defined as the cutting coefficient (C_C), and the ratio of F_n to P_{Rev} *is* defined as the penetration index (R_f). Therefore:

$$C_c = F_r / F_n \text{ ; and } R_f = F_n / P_{Rev} \quad \text{(C-3)}$$

e. Research on TBM cutting mechanics has yielded the following important observations:

- P_{Rev} *is* primarily controlled by F.; i.e., with sufficient delivered power, cutterhead rpm does not strongly affect P_{Rev}.
- Optimized cutting is possible when the ratio of spacing(s) to P_{Rev} *(s/p) is* on the order of about *8* to *20* for a wide variety of rock units.
- A less than optimum, but still satisfactory cutting rate *s/p* ratio may occur in weaker rock due to high penetrations at lower cutter forces.
- For strong rock, high critical thrust results in reduced penetration and increased *s/p* ratios and acceptable mining rates are difficult to achieve.
- For porous and micro-fractured rock, indentation results in large volume of crushed and potentially abrasive material and reduced chip formation.

C-2. TBM Penetration Rate Prediction From Intact Rock Properties

The most important independent variables for TBM design include installed power, cutterhead rpm, thrust, and disc spacing. Each parameter influences the resulting penetration rate. In practice, average disc spacing has been designed in a limited range between 60 and 90 mm.

Fixed design conditions include disc rolling velocity and disc tool loading limits. Given accepted limits on disc velocity and loading and the general range of target *slp* ratios used in practice, a method to predict relationships between *Fn, Fr* and *PRev* would permit a TBM design with adequate power and thrust to achieve desired penetration rates.

a. Prediction methods. Many efforts have been made to correlate laboratory index test results to TBM penetration rate. Prediction equations are either empirically derived or developed with a theoretical basis using force equilibrium or energy balance theories. Simplified assumptions of disc indentation geometry and contact zone stress distribution are made, and coefficients derived from correlations with case history information are used. Most prediction methods agree on trends, but empirical methods are case-specific in terms of geology and machine characteristics. However, a general statement of caution about the case history databases should be made. Prediction methods that do not consider operating conditions of thrust and torque cannot be applied to projects where equipment operations vary. The condition of the cutters can also have a significant effect on performance, since worn or blunted discs present wider contact areas on indentation and require higher forces for a given level of penetration. Some data bases include performance with single, double, and triple

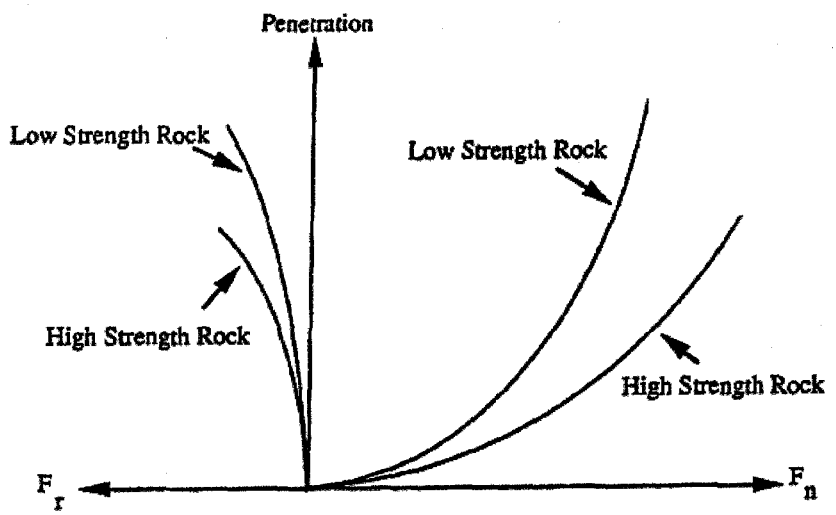

Figure C-2 – General Plot of Disc Cutter Force Variation with Penetration for High and Low-strength Rocks

disc cutters, a variation that greatly affects disc edge loading and spacing penetration ratios. Finally, low-thrust and low-torque mining through poor ground or alignment curves may result in reduced penetration rates.

b. Penetration Index Tests. As examples of index tests used in correlations, several prediction approaches utilize static indentation tests performed on confined rock specimens. A second group of index tests can be called "hardness" tests, including Shore Hardness, Scleroscope Hardness, Taber Abrasion Hardness, Schmidt Hammer Rebound Hardness (H_R), and Total Hardness (H_T), which is calculated as the product of H_R and the square root of the Taber Abrasion Hardness. Dynamic impact tests have also been developed for application to TBM performance prediction. These include Rock Impact Hardness (RIH), Coefficient of Rock Strength (CRS), and the Swedish Brittleness Test (S_{20}) which is incorporated in the prediction method developed by the Norwegian Institute of Technology NTH). Many "*drillability*" and "*abrasivity*" index tests have also been developed; each requires specialized equipment. The CERCHAR (the Laboratoire du Centre dEtudes at Recherches des Charbonnages de France) test has been used in assessing "*abrasivity*", and mineralogical abrasiveness measures, including quartz content and Mohr's hardness scale are used.

c. *Rock strength testing.*

(1) Empirically derived prediction equations have also incorporated results from "conventional" rock strength testing. The rock property most widely used in

performance prediction has been the uniaxial compressive strength (UCS) primarily because of the availability of UCS test results. However, UCS may not be the ideal parameter for TBM performance prediction unless insitu variability of UCS (or of index test results) is evaluated.

(2) Rock tensile strength, most often measured in a Brazil test, may also be used for machine performance prediction. Test results can be used for weak rock to evaluate whether brittle behavior will occur on disc indentation and to evaluate rock strength anisotropy.

(3) Rock fracture toughness and other fracture material properties (such as the critical energy release rate or critical crack driving force) have great potential application for machine performance prediction. However, few tests have been performed at tunneling projects so the correlations performance demonstrated to date must be considered preliminary.

(4) Other descriptive properties are also evaluated during site investigations, and many empirical correlations have included these in linear regression equations. Such properties include density, porosity, water content, and seismic velocities. For weak rock, Atterberg limits and clay mineralogy should be evaluated early in the site investigation, with more specialized testing for swell, squeeze, and consolidation properties perhaps warranted on the basis of the results of index tests.

(5) At this time, a recommended suite of rock property tests for tunnel project investigations should include both tensile and compressive strength, an evaluation of porosity or other measure of dilative versus compactive response, and an evaluation of rock "abrasivity". Care should be taken with the core to minimize stress-relief effects and moisture loss. Sampling biases for or against very weak or very strong rock must be avoided, because it is these extremes that often define success or failure for a TBM application. F or use in specific predictive approaches, particular tests can be performed, such as the various hardness tests or the suite of tests incorporated into the NTH methodology. In all cases, specified equipment for index property testing is mandatory, and suggested procedures must be followed. Guidance concerning required testing can be sought from TBM designers and consultants.

e. *Empirical equations.*

(1) Three commonly applied performance correlations using empirical equations developed from data on rock testing are presented below, with P_{Rev} evaluated in units of millimeters/revolution, F_n in kN, and the compressive (UCS) and Brazilian tensile (σ_{tB}) strengths expressed in units of MPa or kPa, as noted.

(2) Farmer and Glossop (1980), who include mostly sedimentary rocks in their database, derived the following equation:

$$P_{Rev} = 624\, F_n / \sigma_{tB} \qquad (C\text{-}4)$$

(3) Graham (1976) derived a similar equation that uses UCS for a predominantly hard rock (UCS 140 to 200 MPa) database:

$$P_{Rev} = 3940\, F_n / UCS \qquad (C\text{-}5)$$

(4) Hughes (1986) derived a relationship from mining in coal:

$$P_{Rev} = 1.667\, (F_n / UCS)^{1.2} * \{2/D\}^{0.6} \qquad (C\text{-}6)$$

where D *is* the disc diameter in millimeter, and it is assumed that only one disc tracks in each kerf groove, the normal practice for TBM design.

e. *Performance data.*

(1) Rock properties and machine performance data for three tunnel projects in sedimentary rock are used to demonstrate the predictive ability of these correlations in Table C-1. Rock test results, TBM performance, and predicted penetration rates are shown in the table. Average disc forces vary directly with UCS, and the maximum load is well below the maximum load suggested for the cutters used. In each case, TBM penetration and thrust were limited by available torque or by the muck handling system capacity.

(2) The predicted penetrations are nearly always less than achieved by TBMs in operation. The Farmer and Glossop equation yields consistently higher predicted penetrations, and the Graham predictions are consistently lowest. The influence of rock test material condition is indicated by the information for the Grimsby Sandstone.

Much of the original testing on this project was performed on air-dry rock. When the rock was re-saturated and tested, strength reduction was evident. This uncertainty as to intact strength can clearly exert a strong influence on the penetration rate predicted.

(3) The number of equations available leads to an apparent uncertainty in P_{Rev} predictions. Such correlations in the public domain have generally been derived from limited databases, and caution against indiscriminate application is required. In general application, no single approach can be recommended; rather, use of several equations can be useful to assist in design and selection of equipment and for sensitivity studies of the relative importance of various factors. Thrust forces should, in any event, be increased by 15 to 20 percent for TBM design capacity determination.

f. Cutting Coefficients.

(1) Similar equations to predict F_r *are* not common, largely because while thrust is often monitored during

mining, drive motor amperage draw and cutterhead rpm if variable is not often recorded. The approach taken instead is to predict the cutting coefficient, C_c, the ratio of rolling to normal average force. This ratio varies within a general range of 0.1 to 0.25 and is higher for weaker rock, higher P_{Rev}, and for higher F_n, since F_r tends to increase faster than F_n with increasing P_{Rev}. C_C can be predicted as a function of P_{Rev} and disc diameter only, with the influence of rock strength implicit in the achieved P_{Rev}.

(2) Roxborough and Phillips (1975) assumed P_{Rev} equal to the depth of indentation or cut and derived the following equation for C_c;

$$C_c = F_r / F_n = \sqrt{(P_{Rev}/(D - P_{Rev}))} \qquad (C\text{-}7)$$

(3) An equation adopted in Colorado School of Mine's predictive method (Ozdemir and Wang 1979) is:

$$C_c = \tan(\varphi/2);\ \varphi F = \mathrm{Cos}^{-1}[(R - P_{Rev})/R] \qquad (C\text{-}8)$$

which is actually the Roxborough and Phillips equation in different form.

Table C-1 – Comparison of TBM Case Study and Predicted Penetration Rates

Project Information[1]		Rock Strength (MPa)[2]		TBM Performance		Prediction Method 1-Farmer/ Glossop, 2-Graham, 3-Hughes		
Location	Rock Unit	UCS	Brazil Tensile	F_n, kN	P/rev, mm	1 P/rev	2 P/rev	3 P/rev
Buffalo (NY)	Falkirk Dolostone	188	13.3	134	7.6	6.3	2.8	2.9
	Oatka Dolostone	139	13.0	108	10.4	5.2	3.1	3.3
Rochester (NY)	Williamson/Sodus Shale	80	(8.0)	99	10.0	-	4.9	5.7
	Reynales Limestone	128	15.0	141	6.8	5.9	4.3	5.0
	Maplewood Shale	68	(6.8)	98	10.4	-	5.7	6.8
	Grimsby Sandstone:							
	Wet	130	10.1	112	7.9	6.9	3.4	3.7
	Dry	208	6.1			11.5	4.1	4.6
Chicago (IL)	Romeo Dolostone	237	17.0	145	8.0	5.3	2.4	2.4
	Markgraf Dolostone	168	12.1	137	9.3	7.1	3.2	3.5
Austin (TX)	Austin Chalk	10	1.3	33	9.6	15.7	99.1	18.5

[1] Sources: NY and IL projects (Nelson 1983), TX project (Hemphill 1990).
[2] (8.0) and (6.8) for Brazil tensile strength are estimated as UCS/10.

Hughes (1986) suggests:

$$C_c = 0.65\sqrt{(P_{Rev}/(D/2))} \qquad (C\text{-}9)$$

In these equations, D is the disc diameter and R is the disc radius. Table C-2 records the results of an equation companion for 432-mm-diam cutters. The similarity of the results is clear and either can be used to predict C_c and hence F_r and required power for a selected cutterhead rpm.

Table C-2

PRev, mm	Roxborough & Phillips/CSM	Hughes
4	0.10	0.09
8	0.14	0.13
12	0.17	0.15

C-3. TBM Performance Prediction via Linear Cutter Testing

a. A direct way to determine force requirements for TBM design is to perform laboratory linear cutting tests with the rotary TBM cutting process modeled as linear paths of indexed cutter indentations. Linear cutter testing has been used by contractors who plan to make their own decisions about equipment purchase or reconditioning. Such testing is expensive and not likely to be pursued for all tunnel projects. Linear cutter test results of cutter force and penetration relationships may be directly applicable to full-scale TBM penetration rate prediction. However, differences between the tested rock and the rock mass in situ, including differences in relative stiffness between the rock mass and TBM. must be considered.

b. Linear cutter test equipment is available at the Earth Mechanics Institute (EMI) of the Colorado School of Mines (CSM). CSM has developed a complete prediction method for TBM performance using field values of operating thrust, torque, cutter type, and spacing. The

predictions are consistent with actual performance except when applied directly to TBM use in blocky or jointed rock masses. A match of disc cutter tip width and diameter between the field and linear cutter testing is important for accurate predictions of both forces and penetration.

C-4. impact of Rock Mass Characteristics on TBM Performance Prediction

a. Impact of rock mass characteristics.

(1) Rock mass characteristics impact penetration rate in several ways. For example:

(a) If a mixed face of variable rock strength is present at the heading, the penetration rate is more typical of the stronger rock.

(b) For good rock, penetration rate will increase as more discontinuities are present at the face. Penetration rates will be greater when discontinuities are oriented parallel to the rock face.

(c) If rock condition deterioration by geologic structure or weathering is severe, TBM thrust and torque may be reduced to promote face stability.

(2) These factors can be used to guide site investigation efforts. For example, in the common situation of flat-lying sedimentary rock, RQD determined on vertical exploratory core cannot supply information on the frequency of vertical discontinuities that can be exploited in the process of chip formation and are important for penetration rate prediction.

(3) The same factors are generally true of intact rock anisotropy, which can greatly enhance penetration rates, depending on orientation with respect to the tunnel face. Anisotropy effects may be included implicitly in intact rock prediction methods by controlling rock specimen orientation during testing. Tests such as Brazil tension and point load tests have been used for this purpose. On a larger scale, a similar effect can occur, as long as discontinuity frequency does not significantly increase rock support requirements. Increased jointing permits P_{Rev} increase at decreased F_n, perhaps doubling P_{Rev} when joint spacing approach cutter spacing. The effect is most important for thrust-limited mining in stronger rock.

b. Ground difficulty index.

(1) Eusebio et al. (1991) introduced a "Ground Difficulty Index" (GDI) classification scheme, developed from data for a tunnel driven in highly variable rock. Rock mass RQD and RMR classifications were determined, and in-situ Schmidt hammer testing was used to measure intact rock strength variability. From a "basic" penetration rate derived empirically from UCS and including the effect of F_n on penetration, an empirical multiplier (f1) on P_{Rev} *can* be identified depending on RMR classification, as shown in Table C-3:

Table C-3

RMR Class	f1
I	1.0
II	1.1
III	1.1 – 1.2
IV	1.3 – 1.4
V	0.7

(2) A similar approach has been taken by Casinelli et al. (1982), who suggest a correlation between specific energy (SE, in kilowatt hours/cubic meter) and RSR, based on tunnel excavation in granite gneiss as:

$$SE = 0.665\ RSR - 23 \qquad (C\text{-}10)$$

for RSR >50, with RSR the Rock Structure Rating.

(3) The EMI at the CSM has developed an equation to evaluate rock mass impacts based on RQD. Using a database for weaker rocks (UCS < 110 MPa), CSM recommends a multiplying factor, F1, to modify a basic *PRev* determined for "perfect" RQD = 100 rock as:

$$F1 = 1.0 + (100 - RQD) / 150 \qquad (C\text{-}11)$$

and for stronger rocks (UCS ≥ 110 MPa) as

$$F1 = 1.0 + (100 - RQD) / 75 \qquad (C\text{-}12)$$

The increased importance of jointing in stronger rock is evident in these equations.

c. *Impact of in-situ stresses.*

(1) In situ stresses that are high relative to rock strength can promote stress slabbing at the face. At typical mining rates, this response may result in an increased *PRev* if the rock is not greatly overstressed or susceptible to bursting. However, face deterioration and overbreak may develop, which must be controlled with shielding or cutterhead modifications such as false-facing in severe cases. In fact, the TBM operator usually decreases *Fn* and cutterhead rotation rate to improve face stability.

(2) To summarize, if rock support requirements are not changed significantly, a penetration rate (PR) increase can be expected with increased jointing present in a rock mass. Such an effect is most important to consider in very strong rock for which modest increases in PR can significantly improve the economics of a project. In practice, any PR improvement is either implicitly included within empirical correlations or ignored, in anticipation that the impact of any rock instability will dominate the performance response.

Table C-4 – Impacts of Geotechnical Conditions on TBM Operations

Major Geotechnical Conditions	Consequences/Requirements
Loosening loads, blocky/slabby rock, overbreak, cave-ins	At the face: cutterhead jams, disc impact loading, cutter disc and mount damage possible, additional loss on available torque for cutting, entry to the face may be required with impact on equipment selection, recessed cutters may be recommended for face ground control. In the tunnel: short stand-up time, delays for immediate and additional support (perhaps grouting, hand-mining), special equipment (perhaps machine modifications), gripper anchorage and steering difficulty, shut-down in extreme cases of face and crown instability. Extent of zones (perhaps with verification by advance sensing/probe hole drilling) may dictate shield required, and potential impact on lining type selection (as expanded segmental linings may not be reasonable), grouting, and backpacking time and costs may be high.
Groundwater inflow	Low flow/low pressure - operating nuisance, slow-down, adequate pumping capability high flow and/or high pressure - construction safety concerns, progress slow or shut-down, special procedures for support and water/wet muck handling, may require advance sensing/probe hole drilling. Corrosive or high-salt water - treatment may be required before disposal, equipment damage, concrete reactivity, problems during facility operation. Equipment modifications (as water-proofing) may be required if inflow is unanticipated - significant delays.
Squeezing ground	Shield stalling, must determine how extensive and how fast squeeze can develop, delays for immediate support, equipment modifications may be needed, if invert heave and train mucking - track repair and derail downtime.
Ground gas/hazardous fluids/wastes	Construction safety concerns, safe equipment more expensive, need increased ventilation capacity, delays for advance sensing/probing and perhaps project shut-down, special equipment modifications with great delays if unanticipated, muck management and disposal problems.
Overstress, spalls, bursts	Delays for immediate support, perhaps progress shut-down, construction safety concerns, special procedures may be required.
Hard, abrasive rock	Reduced *PRev* and increased F_n - TBM needs adequate installed capacities to achieve reasonable advance rates, delays for high cutter wear and cutterhead damage (especially if jointed/fractured), cutterhead fatigue, and potential bearing problems
Mixed-strength rock	Impact disc loading may increase failure rates, concern for side wall gripping problems with open shields, possible steering problems.
Variable weathering, soil-like zones, faults	Slowed progress, if sidewall grippers not usable may need shield, immediate and additional support, potential for groundwater inflow, muck transport (handling and derails) problems, steering difficulty, weathering particularly important in argillaceous rock.
Weak rock at invert	Reduced utilization from poor traffickability, grade, and alignment - steering problems.

(3) As indicated in the summary presented in Table C-4, the primary impact of rock mass properties on TBM performance is on utilization; an impact that depends greatly on chosen equipment and support methods. Site investigations should be geared to addressing certain basic questions for equipment selection. In weak rock, mucking and rock support are major downtime sources; in very strong rock, equipment wear at high loads and cutter wear are often the major downtime sources. In either case, correct appreciation of the problem or limitation before the equipment is ordered goes a long way toward minimizing the geotechnical impacts. The actions and decisions associated with the answer to each geomechanics question are often the responsibility of the contractor, but clear assessment of each geomechanics question is the responsibility of the investigating engineers.

C-5. Impact of Cutting Tools on TBM Performance

The primary impact of disc wear is on costs, and this can be so severe that cutter costs are often considered as a separate item in bid preparation. The UT database indicates that about 1.5 hrs are required for a solitary cutter change, and if several cutters are changed at one time, perhaps 30 to 40 mins are required per cutter. Higher downtime is closely correlated with large ground water inflows, which make cutter change activities time-consuming. Disc replacement rates vary across the cutterhead, with low rolling distance life associated with center cutter positions where tight turning and scuffing reduce bearing life and vibrations can cause particularly high rates of abrasive wear. For relatively nonabrasive rock, rolling distance life for cutters in gage and face positions are comparable. However, gage replacement rates are higher in terms of TBM operating time because

the travel path is longer and the cutters "wash" through muck accumulations. Gage cutter rolling distance life is notably reduced in highly abrasive rock mining.

Database information indicates that TBM penetration rate is generally unaffected by disc cutter abrasion until the wear causes about a 40-mm decrease in disc diameter. For additional amounts of wear, penetration rate may only be maintained with increased F_n. If thrust is not increased, the penetration rate achieved may be reduced by 15 to 25 percent. Normal cutterhead maintenance checks will guard against this happening. It is particularly important for the contractor to develop a management plan to promote cutter life, since high cutter loads associated with worn cutters can result in higher disc and bearing temperatures and in more bearing and seal failures. Regular inspection and planned replacements are required to maximize disc life, reduce cutter change downtime, and minimize cost and schedule impacts. Cutter change downtime can also be expressed on the basis of shift time. For nonabrasive rock, the cutter downtime may be on the order of 3 percent. For highly abrasive rock, however, cutter changes may require more than 20 percent of all shift time.

Cutter change downtime can also be recorded as hours required per meter of excavation. For nonabrasive rock, average cutter change downtime was 0.02 to 0.05 hr/m. For more abrasive rock, downtime may increase to more than 0.2 hr/m. Tight alignment curves can decrease cutter disc life significantly. The EMI at the CSM has developed an equation to evaluate alignment curve radius impacts on cutter life. CSM recommends a multiplying factor, F2, to modify an expected "normal" cutter life for alignment curves of radius *R*, in meters determined for "perfect" RQD = 100 rock as:

$$F2 = 1.0 - 23/R \qquad \text{(C-13)}$$

The recent trend toward larger disc diameter means that cutters are heavier, and equipment must be installed to facilitate cutter transport and installation. Wedge-lock housing has been developed that makes cutter changes much easier and that has proven to be very durable. Other improvements include rear-access cutters that do not require access to the front of the cutterhead for replacement. In cases of face instability, these cutters greatly improve safety but are more expensive and take more time to replace.

In abrasive conditions, significant wear of the cutter mount and hub can occur with reduced disc bearing life. In relatively nonabrasive rock, 6 to 10 discs can be refit on each hub before repair is necessary. However, in abrasive sandstone, a rate of only 1 to 3 discs per hub may be typical.

In very abrasive rock, tungsten carbide cutters may be used at increased expense. Most of the databases on cutter replacement rates and costs are proprietary. The largest public-domain database for abrasive wear rate prediction can be accessed through the NTH (1988) method, but specific rock tests must be performed that require special equipment. If abrasive conditions are anticipated, it is important to submit samples for testing by machine manufacturers, contractors, and specialized consultants.

C-6. The EMI TBM Utilization Prediction Method

a. Several databases can be accessed to assist in evaluations of TBM utilization. In the future, a complete simulation computer program including all components of TBM construction operations will be available through the Texas database analysis.

b. The EMI CSM (Sharp and Ozdemir 1991) also has developed an approach to evaluate TBM utilization via analysis of a proprietary database. To account for delays associated with thrust cylinder piston restroke, a parameter F3 is recommended as:

$$F3\ (hr/m) = 0.030\ (hr/m) + (409\ m\text{-}hr)/R^2 \qquad \text{(C-14)}$$

where *R is the* radius of alignment curvature in meters. For straight tunnel sections, this equation predicts about 2.7 min per 0.45-m stroke cycle. For tight curves of perhaps 150-m radius, this stroke reset time increases to 4.4 min. To account for unscheduled maintenance and repairs, a factor F4 (in units of delay hours) is evaluated as:

F4 during start-up = 1.0 hr per TBM mining hr

and

F4 following start-up = 0.324 hr per TBM mining hr.

c. The start-up period is identified as a learning curve with shift utilization deceasing to a fairly constant value corresponding to production mining. Scheduled maintenance, including cutterhead checks and TBM lubrication, should be evaluated at 0.067 delay hours per TBM mining hour.

d. Surveying delays are discretely accounted for in the CSM approach. Normal delays for straight tunnel sections are minimal at 0.0033 hr per meter of bored tunnel. For alignment curves, survey delays are evaluated as:

$$\text{Survey delay}\ (hr/m) = 0.0033 + 192\ m\text{-}hr / R^2 \qquad \text{(C-15)}$$

where *R is* the radius of curvature in meters. For a 150-m-radius curve over a 200-m-long tunnel length, survey delays of about 2.5 hr should be expected by this equation.

e. For minimal nuisance water inflows, delays can be expected at a rate of about 0.0056 hr per meter of bored tunnel. For conditions of inflow up to about 3 to 4 m^3/min/m of tunnel, delays on the order of 0.085 hr/m of

bored tunnel should be expected. Excess water inflow and grouting precipitates additional delays that are higher for increasing inflow volumes and low gradient to downhill tunnel driving. For example, for downhill grades, delays will multiply to 2 hr/m of tunnel at inflow rates in excess of 13 to 15 m^3/min/m of tunnel.

f. Delays associated with the tunnel mucking system can be estimated considering tunnel gradient, direction of drive, and expected mucking system. Table C-5 shows some general guidelines.

Table C-5

Tunnel Description	Mucking Method	Delay (Hr./min.)
Start-up Driving	Trucks	0.115
Production Driving -15° to -1° down	Conveyor	0.071
-1° to +3°	Train	0.056
+3° to +15° uphill	Conveyor	0.071

Delays associated with extending utility lines will also depend on tunnel grade:

$$\textit{Utility Delays (hr/m of tunnel)} = 0.030 + 0.0013G \qquad \text{(C-16)}$$

with G the tunnel grade defined as the angle (in degrees) of TBM driving above (>0) or below (<0) the horizontal. Delays associated with installing temporary support accumulate as a function of rock mass quality. In the CSM approach, Rock Support Category (RSC), similar to the classes resulting from RMR classification, is used (See Table C-6). Labor delays are evaluated to cover time spent on shift changes, safety meetings, lunches, etc. CSM recommends using 2.5 percent of the overall shift time as labor-delay downtime.

Table C-6

RSC Category	Delay (Hr./min. of Bored Tunnel)
I	0
II	0
III	0
IV	0.028
V	0.043

8. The CSM approach includes all aspects of TBM operations, and its validity for general application resides in the proprietary database used to derive these equations. However, the cutter life and P_{Rev} prediction methods are not in the public domain. Until more data analysis is completed in the public domain, however, the CSM methodology is recommended as a way to evaluate decisions required for project alignment and equipment selection.

C-7. The NTH TBM Performance Prediction Methodology

a. The Norwegian Institute of Technology (NTH) has developed the most thorough, published predictive approach for TBM performance (NTH 1988). The NTH method is certainly the most systematic method available in the public domain and includes all desirable aspects of TBM design and operation, including thrust, torque, rotation rate, cutterhead profile, disc spacing and diameter, and disc bluntness.

b. Intact rock tests required in the methodology include three specialized tests for "abrasivity" value (AV), brittleness (SZO, from the Swedish Brittleness test), and "*drillability*" (the Sievers J Value). Derived rock parameters include the Drilling Rate Index (DRI) and Cutter Life Index (CLI). The F_n versus P_{Rev} relationship is nonlinear, and the concept of "critical thrust" is incorporated as a normalizing parameter. Various factors are offered to modify the calculated P_{Rev}, thrust, and torque for differences in cutter diameter and kerf spacing.

c. The NTH method is derived for a database consisting primarily of experience in Scandinavian rocks and may be considered more suitable for application to tunneling in igneous and metamorphic rock. Certain "rules" for TBM design are also incorporated into the figures presented:

- Cutterhead rpm is established by maximum gage cutter rolling velocity (Table C-7):

Table C-7

Disc Diameter		Max Gage Velocity (m/min)
mm.	in.	
356	14	100
394	15.5	120
432	17	160

- Disc groove average spacing (TBM radius/number of discs), assuming only one disc cutting each groove, is set at about 65 mm.
- Maximum cutter loading is dependent on disc diameter (Table C-8):

Table C-8

Disc Diameter		Max Disc Cutter Load KN
mm.	in.	
356	14	140 - 160
394	15.5	180 - 200
432	17	220 - 240
483	19	280 - 300

- Installed cutterhead power is expected according to the relations shown in Table C-9:

Table C-9

Cutter Diameter		Installed Power kW
mm.	in.	
356	14	700 + 140 (D – 5m)
394	15.5	850 + 170 (D – 5m)
432	17	1,050+ 200 (D – 5m)
483	19	1800 + 360 (D – 5m)

d. The method for P_{Rev} prediction relies on DRI values that can be tested through NTH, although correlations between DRI and UCS (determined on 32-mm-diam cores) are presented for some rock types in Table C-10. Note that low DRI values correspond to difficult drilling, so that low DRI generally corresponds to high UCS.

Table C-10

Rock	DRI Range	Range in UCS, MPa
Quartzite	20 – 55	> 400-100
Basalt	30 – 75	
Gneiss	30 – 50	300–100
Mica Gneiss / coarse Granite	30 – 70	240–70
Schist / Phyllite	35 – 75	150–50
Med/Fine Granite	30 – 65	280–120
Limestone	50 – 80	110–70
Shale	55 - 85	30-10
Sandstone	45 – 65	180-100
Siltstone	60 - 80	100-20

e. The NTH method relies on CLI, the cutter life index for disc replacement rate estimation. The NTH database includes the information on CLI shown in Table C-11:

Table C-11

Rock	CLI Range
Quartzite	0.8
Basalt	25 – 75
Gneiss	2 – 25
Schist / Phyllite	10 – 40
Med/Fine Granite	30 – 65
Limestone	70 – >100
Shale	40 - >100

The NTH approach to TBM performance estimation, summarized herein, represents a discussion of the general methodology. The many figures and tables included in the source manual are reduced to close approximations for presentation in this document. If precise values of the identified factors are desired, the user should consult the NTH project report.

g. In the NTH method, the P_{Rev} prediction is achieved as:

$$P_{Rev} = [F_n/M_l]^b \qquad (C\text{-}17)$$

with M_l found as a "critical thrust," evaluated for P_{Rev} = 1 mm, and *b is* the "penetration coefficient."

The M_l is found from a sequence of figures in the NTH report and is a function of DRI and factors associated with disc diameter (k_d), disc groove spacing (k_a), and rock mass fracturing (k_s). The k_s factor effectively modifies the thrust versus penetration relationship for a given intact rock, such that the more fractured a rock mass is, the higher the P_{Rev} achieved for a given F_n. This factor is also used in torque calculations since, in fractured rock, torque demand increases with increased penetration. The *Ml* increases with increasing cutter diameter and spacing and decreases with higher DRI and increased fracturing (high k_s).

The k_d factor is found as shown in Table C-12:

Table C-12

Disc Diameter		k_d
mm.	in.	
356	14	0.84
394	15.5	1.00
432	17	1.18
483	19	1.42

The k_a factor can be approximately found as:

$$K_a = 0.35 + s/100 \qquad (C\text{-}18)$$

where s is the average disc spacing, in millimeters. The k_s factor is a function of a classification made on the basis of spacing and strength of discontinuities (joints or fissures) present in a rock mass. Joints are defined as discontinuities that are open; or weak, if filled; and continuous over the size of the excavation. Fissures generally include bedding and foliation-discontinuities with somewhat higher strength than joints. If a rock mass contains no discontinuities, or those present are filled or healed so as to be of very high strength, the material is considered massive rock (Class O). Table C-13 indicates the general range of k_s, expected for rock masses dominated by various classes of jointing or fissuring. The low end of each k_s range corresponds to discontinuities generally trending normal to the excavated face or with strike parallel to tunnel axis. The high end range of k_s corresponds to discontinuities favorably oriented for chip formation, i.e., parallel to the excavated face or with relative strike perpendicular to the tunnel axis. Users of the NTH method should consult the referenced manual for a complete treatment of k_s selection. For joints at close spacing, it is likely that face instability will dominate TBM operations, and no k_s *is* assigned.

h. In the NTH database, Class O - I rocks were generally gneiss, quartzite, and basalt. Classes III and IV are predominantly populated by schists, phyllites, and shales. The penetration coefficient, b, is found as a function of M_l, disc spacing, and disc diameter. The coefficient varies from about 1.0 to greater than 4.0; b is highest for large M_l values and disc diameter, and more closely spaced cutter grooves or, in general, for stronger rock.

Correct selection of b is very important to the NTH approach as it is the exponent used to establish the basic force/penetration relationship. Reference should be made to NTH for appropriate rock testing and selection of both Ml and b for site-specific applications. With all parameters identified, it is possible to evaluate P_{Rev} and PR, the penetration rate in terms of meter/mining hour, and to design a TBM for required thrust and P_{Rev}.

i. To evaluate torque requirements, the NTH method uses the following equation:

$$F_r = F_n \sqrt{(P_{Rev})} \qquad (C\text{-}19)$$

where C is the cutter constant, a function of disc diameter, k_s, and cutter sharpness. In application, the NTH method sometimes has indicated lower penetration rates than were achieved. This difference is due to the method being based upon laboratory test results and not in situ strengths. The NTH methodology includes an approach to estimate cutter replacement rates. The prediction is based on the Cutter Life Index (CLI), a compound parameter depending on the Abrasion Value (determined for steel rings) and the Siever's J-value (a "drillability" test).

j. Average disc life, L_h, in units of TBM mining hours per cutter, is found as:

$$L_h = DL\ k_\varphi\ k_{rpm}\ k_N\ k_{min} / N \qquad (C\text{-}20)$$

where N is the number of discs, and *DL is* the "Disc Life," found as shown in Table C-14:

Table C-13a

Joints		Fissures		k_s
Class	Spacing	Class	Spacing	
0	> 1.6 m	0	> 1.6	0.36
0 – I	1.6	I	0.8 – 1.6	0.5 – 1.1
I	0.8 – 1.6	II	0.4 – 0.8	0.9 – 1.5
I – II	0.4 – 0.8	II – III	0.2 – 0.4	1.1 – 1.8
II	0.2 – 0.4	III	0.1 – 0.2	1.3 – 2.3
II – III	0.1 – 0.2	III – IV	0.1 – 0.05	1.9 – 3.0
> III	Not Valid	IV	> 0.05	3.0 – 4.4

Table C-13b

Disc Diameter		k_s Range	C	
mm	in		Blunt	Sharp
356	14	From < 0.75 up to 4.0	0.038 0.070	0.044 0.082
394	15.5	From < 1.0 up to 4.0	0.034 0.050	0.041 0.060
432	17	all	0.025	0.033
483	19	all	0.018	0.027

Table C-14

Disc Diameter		DL
mm	ins	TBM Hours
356	14	8.6 CLI
394	15.5	12.4 CLI
432	17	17.4 CLI
483	19	26.3 CLI

k. The various correction factors are defined as follows: The correction factor k_φ *is* a correction for TBM diameter and cutterhead type, required since the proportion of gage cutters decreases as TBM diameter increases, and because cutters on flat-faced cutterheads have longer life than do cutters on domed cutterheads. Values for k_φ *are* shown in Table C-15.

Table C-15

TBM Diameter m	k_φ	
	Domed	Flat
3	0.92	1.04
5	1.19	1.34
7	1.40	1.58
10	1.67	1.87

(2) The correction factor k_{rpm} *is* for cutterhead rotation rate, required since the faster the rpm, the higher the rolling velocities and the shorter the disc life. This correction factor is found as:

$$K_{rpm} = 38 / (D\ rpm) \qquad (C\text{-}21)$$

where rpm is the cutterhead rotation rate in revolutions per minute and *D is* the diameter of the TBM in meters.

(3) The correction factor k_N is developed for TBMs where disc spacing is not at the 65 mm assumed. With more discs at smaller spacing, a longer life is expected. If s is the average disc spacing in millimeters (TBM radius divided by the number of cutters), k_N is found as

$$K_N = 65 / s \qquad (C\text{-}22)$$

The correction factor k_{min} is designed to correct the estimated cutter life for the presence of abrasive minerals such as quartz, mica, and amphibole. This correction factor is calculated as:

$$k_{min} = k_{quartz}\, k_{mica}\, k_{amph} \qquad (C\text{-}23)$$

with the correction factors for individual minerals found to sufficient accuracy by interpolation from values in Table C-16 with the mineral content defined on a volume percent basis:

Table C-16

Mineral Content, Volume (%)	k_{quartz}	k_{mica}	k_{amph}
0	1.00	1.00	1.00
10	0.74	0.78	0.90
20	0.67	0.72	0.58
30	0.65	0.67	0.46
40	0.65	0.65	0.38
50	0.65	0.62	0.34
≥ 60	0.65	0.60	0.31

l. Using results horn P_{Rev} calculation, it is also possible to express cutter life in terms of cutter rolling distance or cubic meters of rock excavated per cutter change. By the NTH database, typical 394-mm-diam rolling distance life varies from 200 to 1,000 km for highly abrasive rock, and up to 5,000 to 10,000 km for nonabrasive rock. Cutter life is reduced by 30 percent for 356-mm-diam cutters and increased by 50 to 65 percent for 432-mm-diam cutters. Cutters on flat cutterheads have 10-percent longer life than on domed cutterheads, and constant section cutters last 10 to 15 percent longer than do wedge section cutters with similar amounts of steel in the disc rings. Mining around tight curves reduces cutter life by about 75 percent.

m. The NTH methodology also permits utilization and advance rate prediction in a manner similar to that used in the CSM approach as outlined below:

- The mining time, T_b, can be evaluated from the *PRev* established previously.
- Regrip time, T_l, estimated as about 5.5 min per reset cycle.
- The cutter change downtime, T_k, is estimated using the output from cutter life calculations. For cutter diameters ≥ 432 mm (17 in.), NTH suggests using 45 min per cutter change. For larger cutters, a suggested 50 min per change should be used.
- The TBM maintenance downtime, T_{TBM}, *is* estimated as 150 shift hours per kilometer of mined tunnel.
- The time required for maintenance and repair of backup systems, T_{bak}, *is* estimated from the table below.
- Miscellaneous downtime, T_a, includes other activities such as waiting for return of empty muck cars, surveying, and electrical installations. The T_d *is* related to type of back-up equipment and can also be estimated from information in Table C- 17.

Table C-17

Back-up System	Shift hr/km mined tunnel	
	T_{bak}	T_a
Single track	40	185
Double track	90	95
Trackless	55	95

The sum of these time increments equals the shift time, from which utilization and advance rate can be calculated. The NTH method also includes approaches to evaluate project cost, support requirements, and additional information on all components of downtime, site investigations, and interpretation of geologic conditions.

APPENDIX C2 – TUNNEL BORING MACHINES; PHOTO GALLERY

PIPE JACKING MACHINES

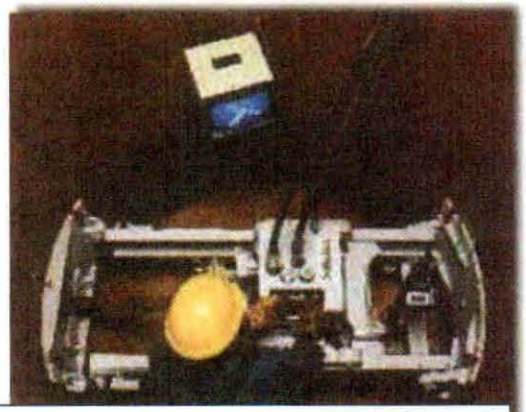

PIPE JACKING; GUIDED DRILLING TO TARGET SHAFT
Showing the BM 150 Machine
(Source: Herrenknecht AG)

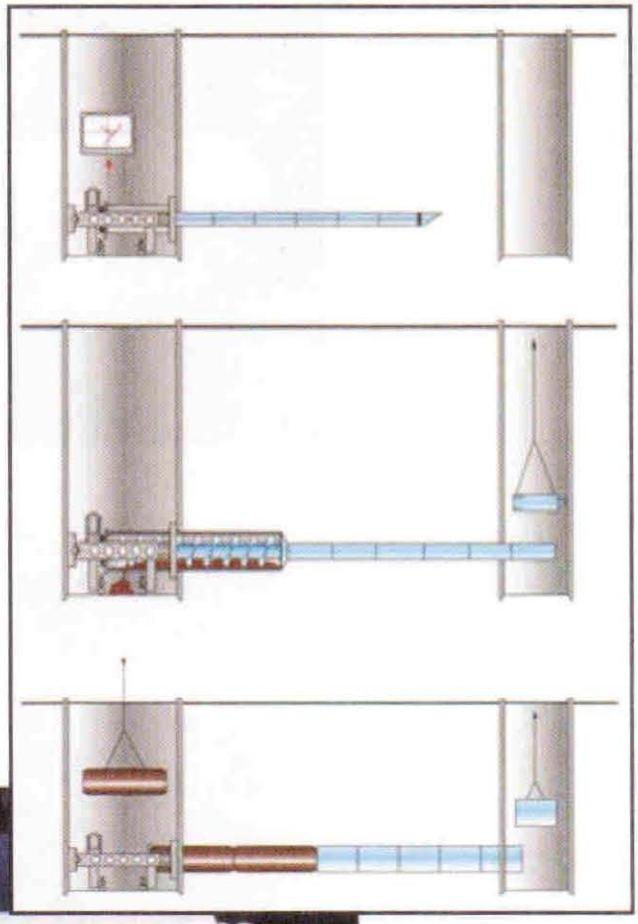

ROCKHEADS

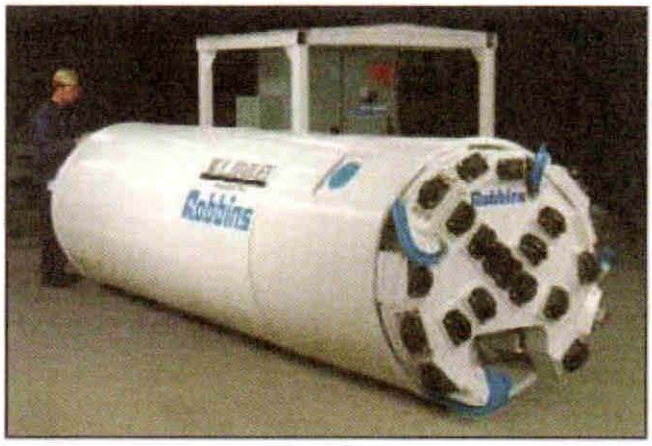

SHIELDED TBMs

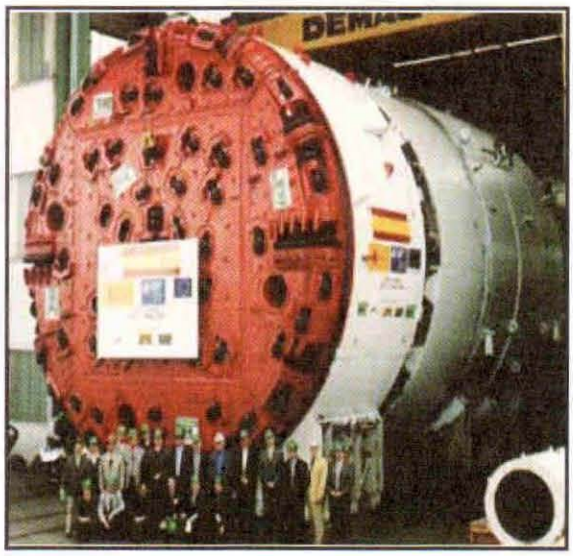

DOUBLE SHIELD TBM
(9.51m dia.; Guadarrama Tunnel, Spain – Source: Herrenknecht AG)

MIX FACE TBMs

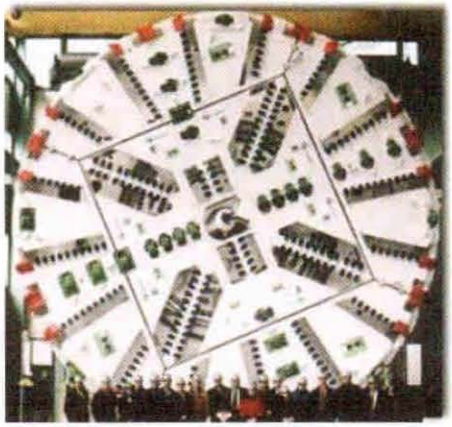

CONVERTIBLE MIXSHIELD TBM
(11.57m dia.; two-story Paris Freeway A86. Source: Herrenknecht AG)

SLURRY TBMs

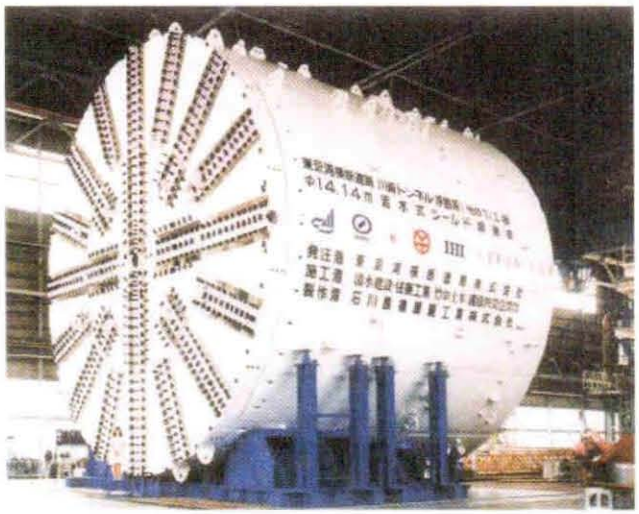

SLURRY SHIELD TBM
(14.14m dia.; Trans-Tokyo Bay (TTB) Highway, Japan. Source: IHI)

EPB TBMs

EPB TBM
(9.76m dia.; Botlekspoor Tunnel, Netherlands - Source Herrenknecht AG)

HARD ROCK TBMs

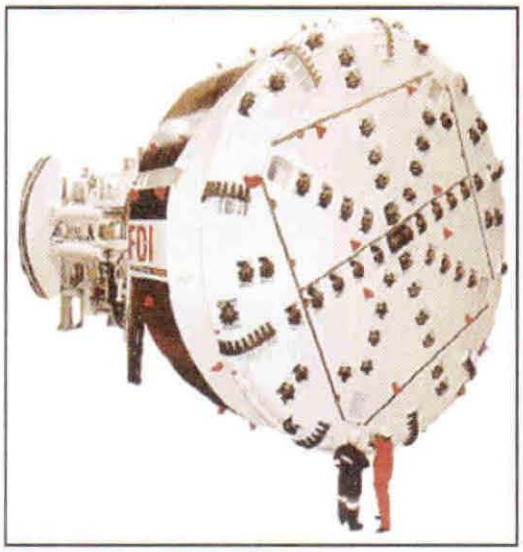

HARD ROCK TBM
(10m dia.; Manapouri Tunnel, New Zealand – Source: Robbins Company)

SHIELDS IN JAPAN

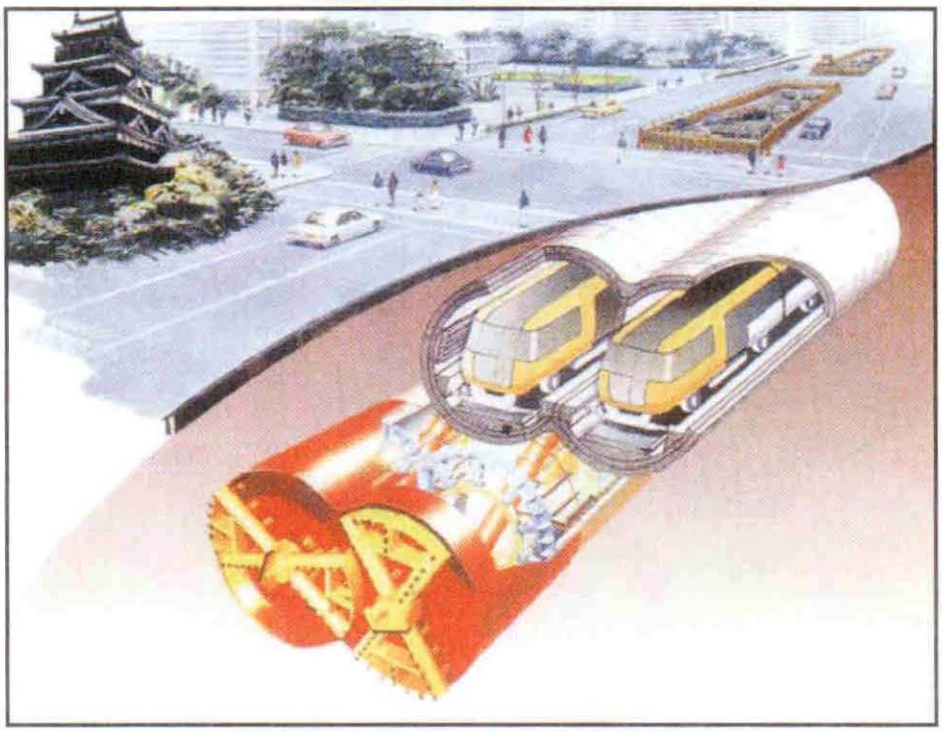

SCHEMATIC - DOT (DOUBLE-O-TUBE) METHOD (Source: IHI)

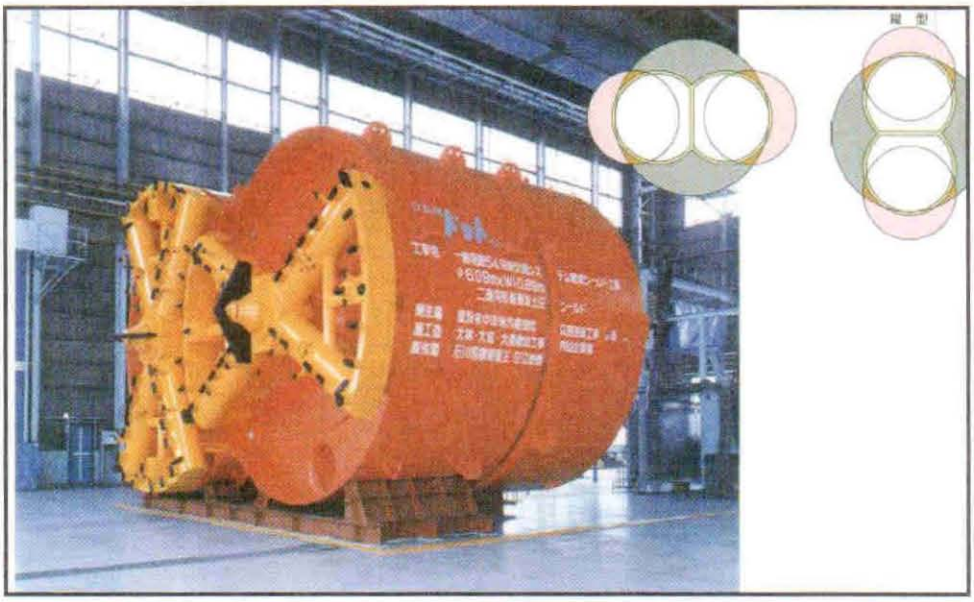

DOT (DOUBLE-O-TUBE) SHIELD MACHINE
(6.09m X W10.69m Hiroshima Urban Traffic System. Source: IHI)

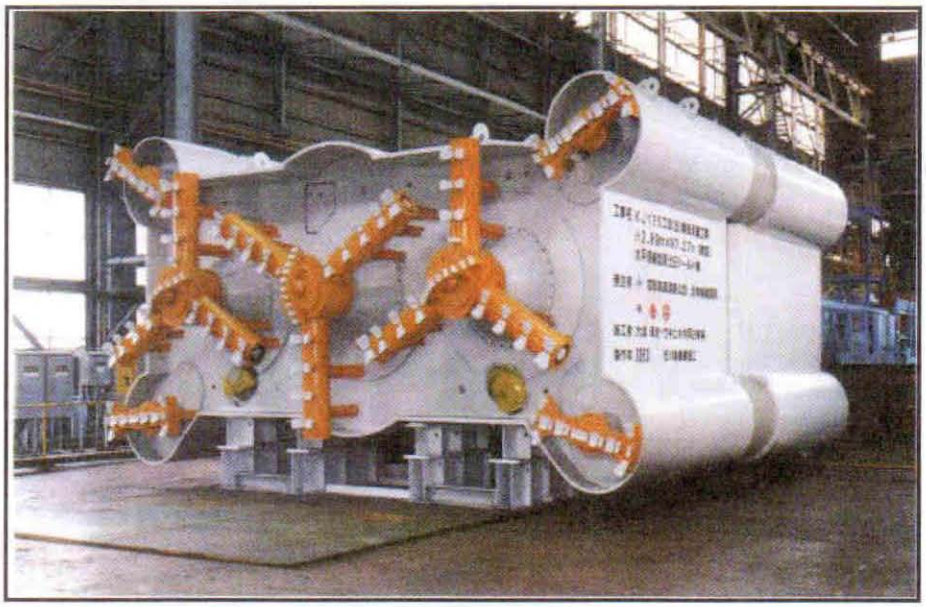

RECTANGULAR MMST SHIELD MACHINE
(H2.89M x W7.27m Shield Machine for MMST Method Highway Tunnel. Source: IHI)

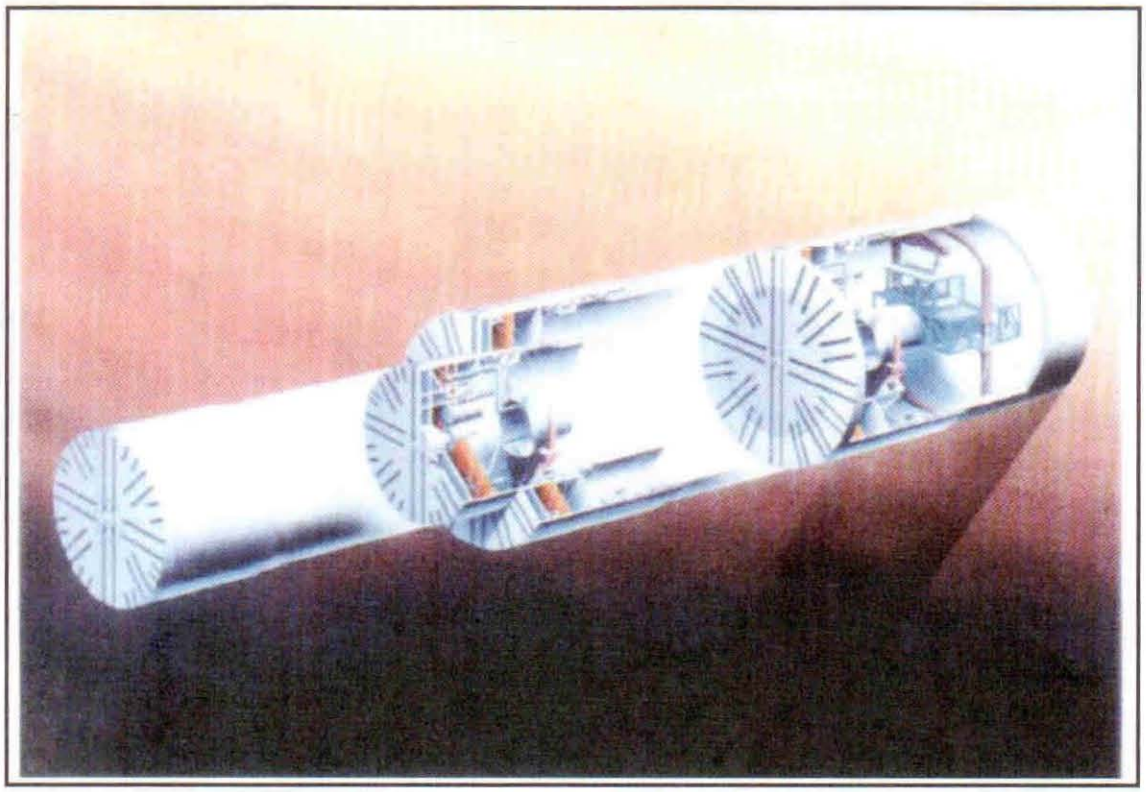

TUNNEL CONSTRUCTION SECTION
ILLUSTRATION OF ARRIVAL-TURNING AND RESTART PROCEDURE AT SHAFT

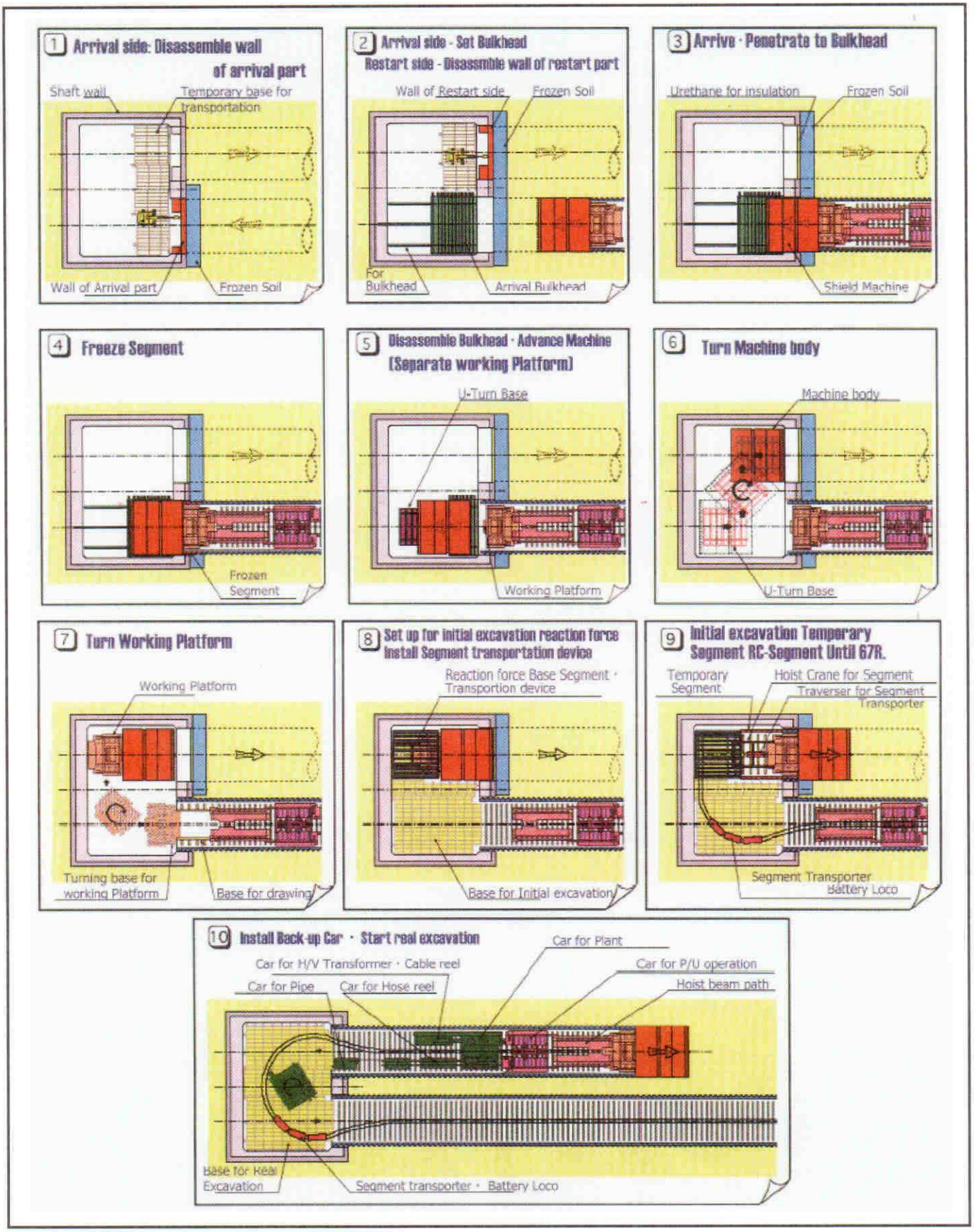
1 Arrival side: Disassemble wall of arrival part
Shaft wall
Temporary base for transportation
Wall of Arrival part
Frozen Soil
2 Arrival side - Set Bulkhead
Restart side - Disassmble wall of restart part
Wall of Restart side
Frozen Soil
For Bulkhead
Arrival Bulkhead
3 Arrive · Penetrate to Bulkhead
Urethane for insulation
Frozen Soil
Shield Machine
4 Freeze Segment
Frozen Segment
5 Disassemble Bulkhead · Advance Machine (Separate working Platform)
U-Turn Base
Working Platform
6 Turn Machine body
Machine body
U-Turn Base
7 Turn Working Platform
Working Platform
Turning base for working Platform
Base for drawing
8 Set up for initial excavation reaction force Install Segment transportation device
Reaction force Base Segment · Transportion device
Base for Initial excavation
9 Initial excavation Temporary Segment RC-Segment Until 67R.
Temporary Segment
Hoist Crane for Segment
Traverser for Segment
Transporter
Segment Transporter
Battery Loco
10 Install Back-up Car · Start real excavation
Car for Plant
Car for H/V Transformer · Cable reel
Car for P/U operation
Car for Pipe
Car for Hose reel
Hoist beam path
Base for Real Excavation
Segment transporter · Battery Loco